7MPa

Single Acting

New

Swing Clamp / Link Clamp with Action Confirmation

ONLY ONE AIR PORT to confirm clamp and unclamp.

Model LGV
Swing Clamp

Model LJV
Link Clamp

KOSMEK
Harmony in Innovation

Air Sensing Swing Clamp

Low Pressure : 2.5~7MPa

Swing Clamp with Action Confirmation

Hydraulic Single Action

Model LGV

ONLY ONE AIR PORT to confirm clamp and unclamp.

Compact Clamp with Action Confirmation System

PAT.P.

NEW

7MPa Single-Acting Swing Clamp with Action Confirmation

3 Options Available

(1) Clamp・Unclamp Confirmation with One Air Port (Option E)

(2) Clamp Confirmation Only (Option H)

(3) Unclamp Confirmation Only (Option J)

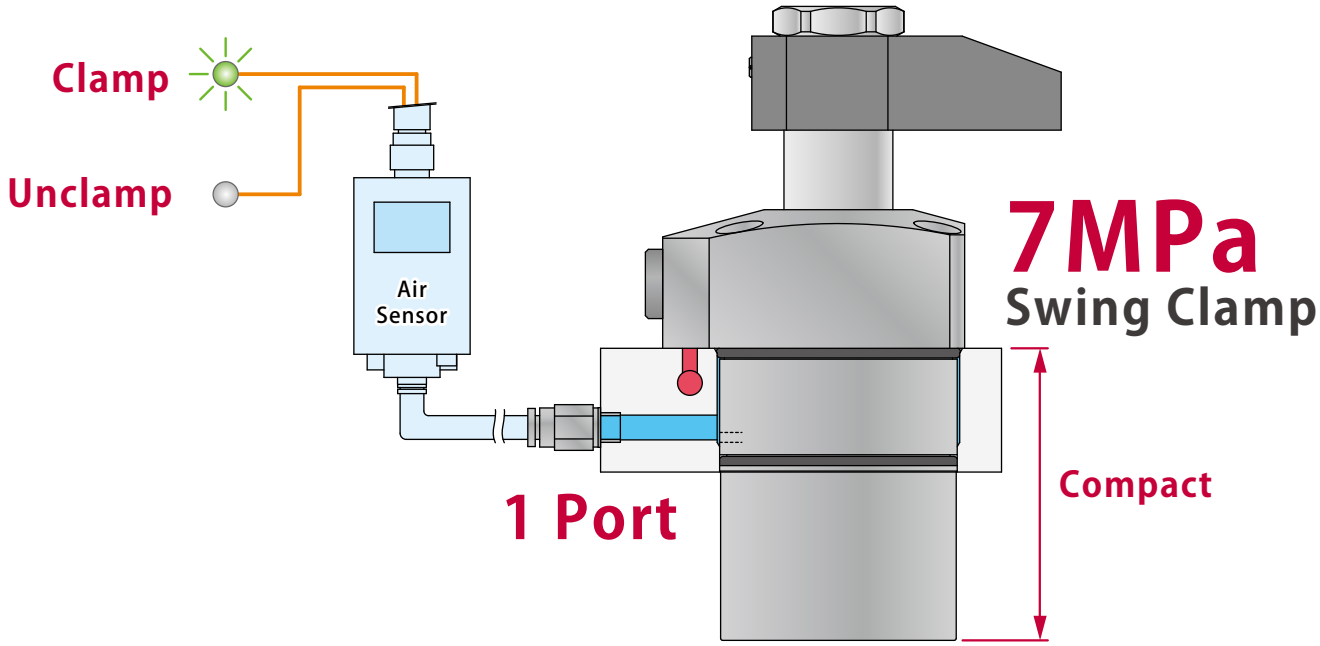

Application Example

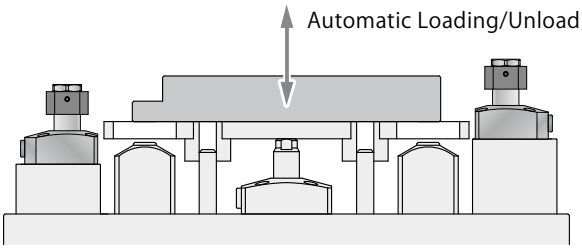

For Automation Line
Requiring Action Confirmation

Features

Direct Mount Speed Control Valve

Speed control valve with air bleeding function can be directly mounted to the product. (Speed control valve is sold separately.)

model BZL-A

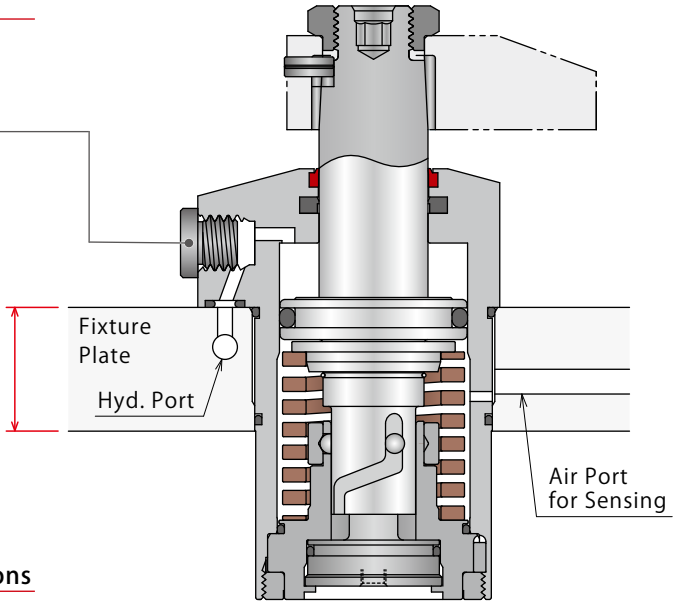

The Same Dimensions for All Confirmation Options

Unified dimensions within each would allow multiple confirmation configuration. Common porting simplifies fixture circuit design.

Minimized Number of Sensors

※ In case of option E：Clamp・Unclamp Detection

Only one air sensor is required to check both clamping and unclamping actions. (Required to use a two-output air sensor.)

Reduce the Number of Air Sensors

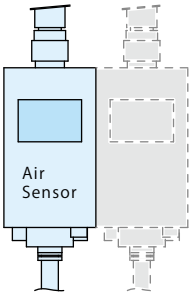

Minimized Number of Ports・Simple Machining

Integrating ports for the sensor allows for reducing the number of both ports of a rotary joint and air passages of a fixture plate. Plus, they can simplify the machining of a mounting hole.

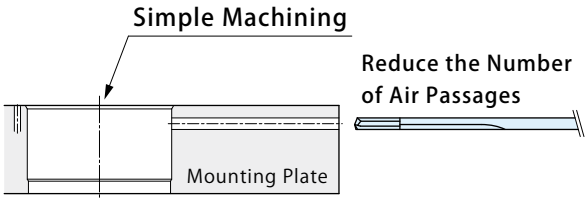

Action Description (Internal Structure)

The figure shows clamp with option 5 E (Clamp - Unclamp Confirmation)

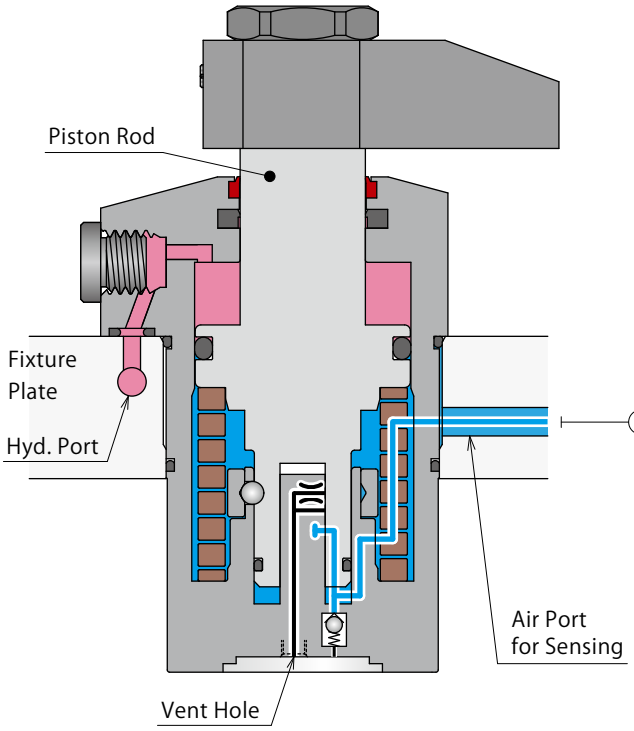

Clamping Action

The piston rod descends as it swings.

↓

After swing action is completed, the piston rod descends vertically and clamps the workpiece.

Hyd. Pressure	Air Sensor	
Clamp Side	Clamp Check Output 1 (OUT 1)	Unclamp Check Output 2 (OUT 2)
ON	ON	OFF

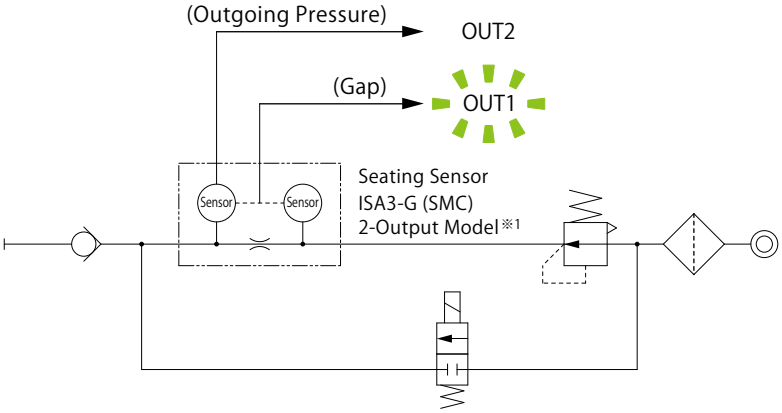

Note :
※1. It is able to use a one-output seating sensor for the action confirmation symbol 5 H/J (one-side action confirmation).

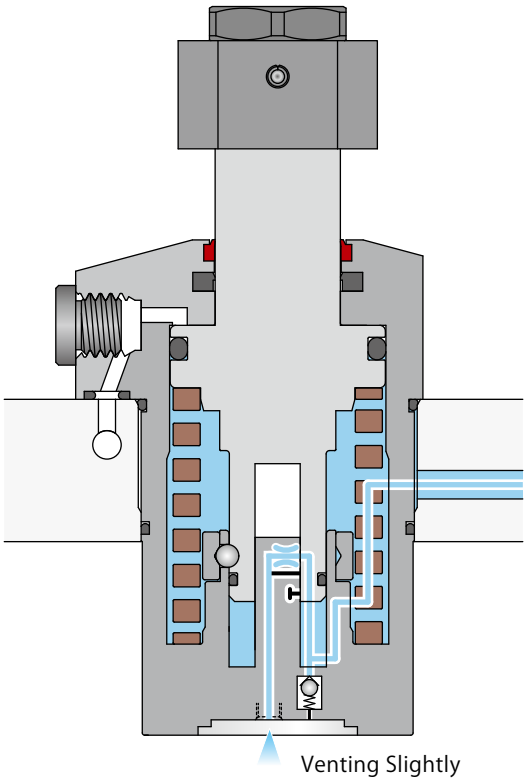

Unclamping Action

The piston rod ascends vertically (Clamp Stroke Range).

↓

After vertical action is completed, the piston rod ascends as it swings.

Hyd. Pressure	Air Sensor	
Clamp Side	Clamp Check Output 1 (OUT 1)	Unclamp Check Output 2 (OUT 2)
OFF	OFF	ON

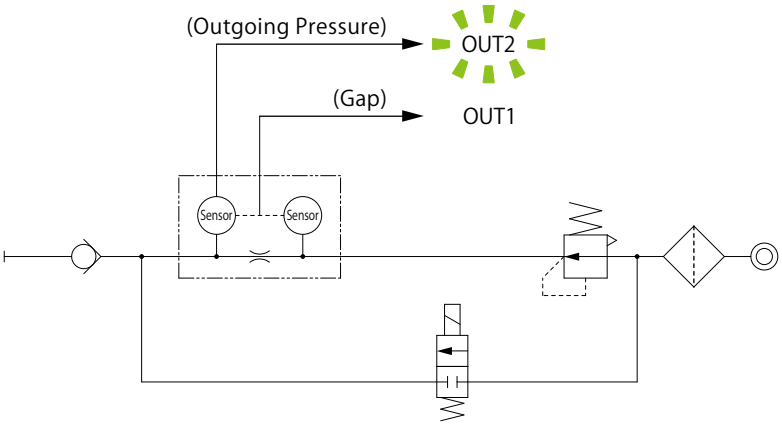

During Swing Action

The air sensor turns OFF during swing action.
The detail of sensor ON/OFF range is shown in Air Sensing Chart on P. 6.

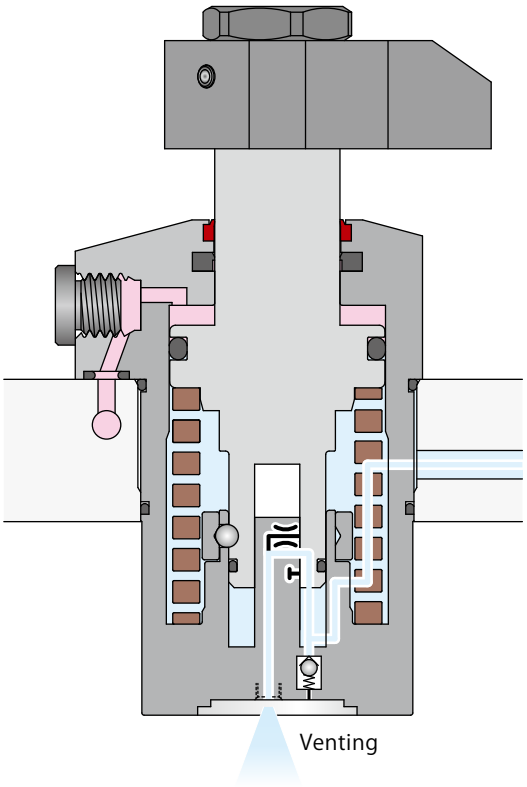

Hyd. Pressure	Air Sensor	
Clamp Side	Clamp Check Output 1 (OUT 1)	Unclamp Check Output 2 (OUT 2)
(OFF)	OFF	OFF

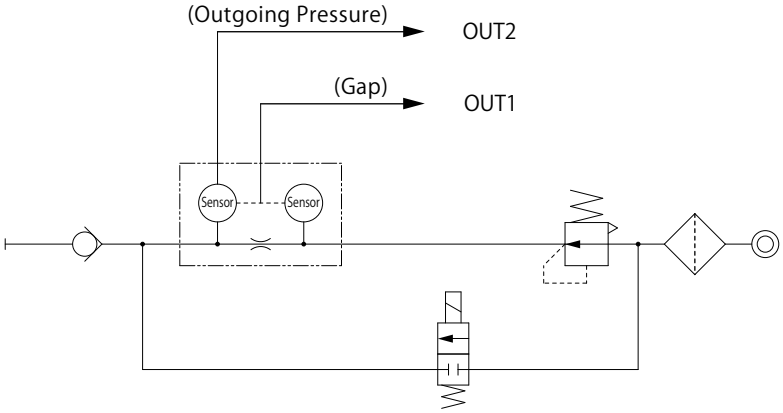

The following shows the actions and the air sensor outputs for the action confirmation symbol 5 H/J.

Action Confirmation	In case of 5 H Clamp Confirmation	In case of 5 J Unclamp Confirmation
Clamping Action	Air Sensor Output ON	Air Sensor Output OFF
Unclamping Action	Air Sensor Output OFF	Air Sensor Output ON
During Swing Action	Air Sensor Output OFF	Air Sensor Output OFF

※ When air sensor is ON：No air leakage from the vent hole. When air sensor is OFF：Air releasing from the vent hole.

Action Confirmation and Air Sensing Chart

Action confirmation can be conducted by detecting differential pressure with an air sensor.

Applicable Model

LGV 048 0 - C R/L **E/H/J**

5 Action Confirmation Symbol
- **E** : Clamp - Unclamp Confirmation
- **H** : Clamp Confirmation
- **J** : Unclamp Confirmation

Air Sensor

Recommended Air Sensor

Action Confirmation Symbol	In case of 5 E	In case of 5 H, J	
Manufacturer	SMC	SMC	CKD
Name	Digital Seating Switch	Digital Seating Switch	Digital Gap Switch
Model No.	ISA3-G□A, ISA3-G□B	ISA3-G□N, ISA3-G□P	GPS3-E
Air Sensor Requirement	**Required to use the 2-output air sensor shown above.**	**Able to use a general 1-output air sensor.**	
Recommended Air Pressure	0.1 ~ 0.2MPa (0.15 ~ 0.2MPa when using 4 clamps.)	0.1 ~ 0.2MPa	

- **In case of 5 E, the number of clamps connected per air sensor : 2 ~ 4 pcs.**
  ※Please contact us when using an air sensor for one clamp.
- In case of 5 **H** and **J**, there is no limitation for the number of clamps connected per air sensor.
- Please refer to manufacturer's catalog or other documents for the details about the air sensor.
- Please keep supplying air pressure when in use.
- Refer to the drawing below for the air circuit structure.
- Please install a check valve (※ part) with low cracking pressure to the detection port of the air sensor.
  (Recommended Check Valve : SMC-made AKH series Cracking Pressure 0.005MPa)

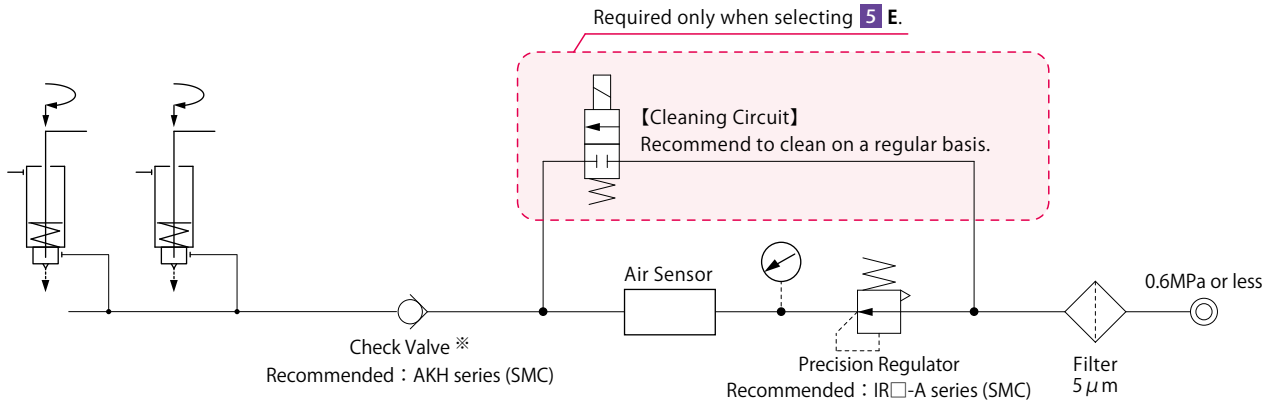

Notes for Design・Installation・Use

- Please keep clear condition at the air vent hole, and prevent coolant and chips from entering the hole. ※
  The air sensor can malfunction if the air vent hole is blocked.

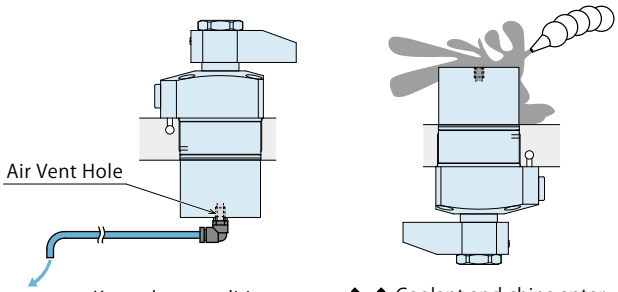

○ Keep clear condition at the air vent hole.

✕ Coolant and chips enter from the air vent hole.

※ The product will be damaged or malfunction due to internal corrosion.

【Prevention of Contaminants to the Air Vent Hole】
Coolant and chips can be prevented by setting a check valve with low cracking pressure. (Recommended Check Valve: SMC-made AKH series, cracking pressure: 0.005MPa)

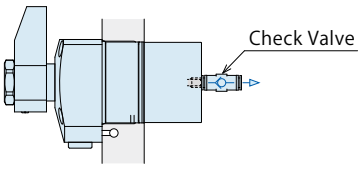

- Keep supplying air pressure to the air port for sensing when in use.

Air Sensing Chart

5 E : Clamp - Unclamp Confirmation

When Connected to 3 Clamps, Supply 0.2MPa Air Pressure

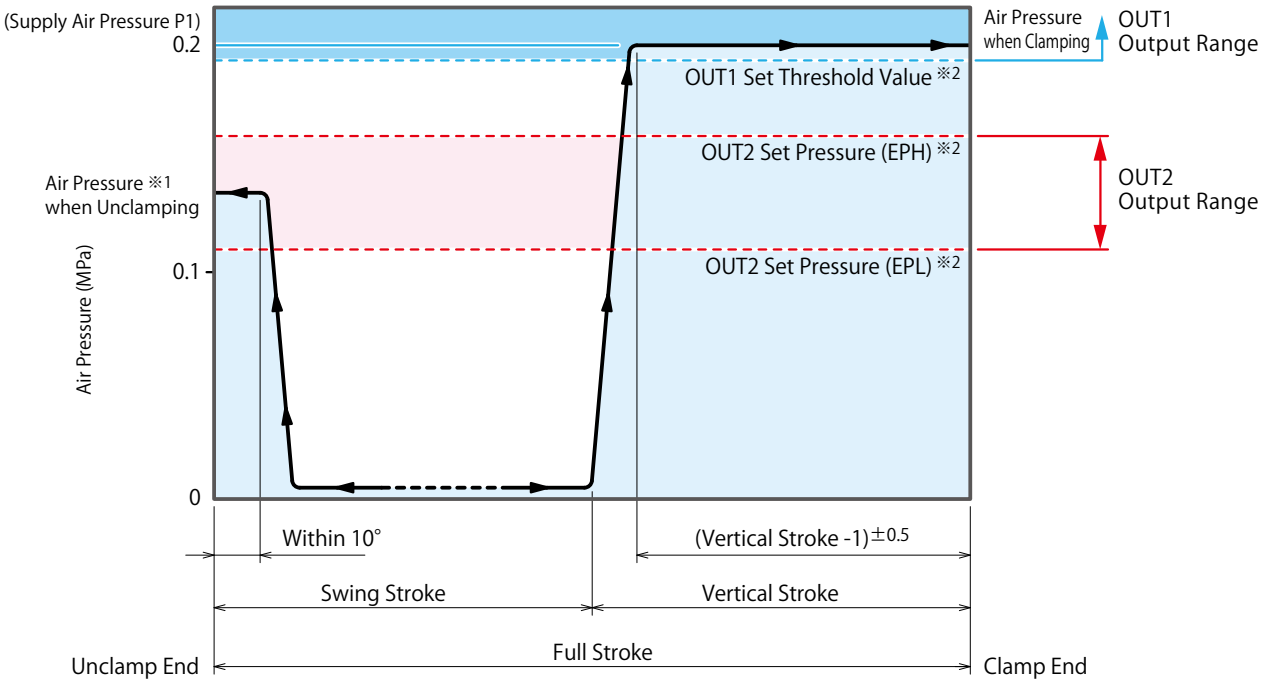

Sensor Setting should be as follows: Detect with OUT1 (Threshold Value) for clamp action confirmation, OUT2 (Pressure Set Value) for unclamp action confirmation. Hysteresis for both OUT1 and OUT2 should be set as 0. Please make sure to use the recommended air sensor.

5 H : Clamp Confirmation

When Connected to 3 Clamps, Supply 0.2MPa Air Pressure

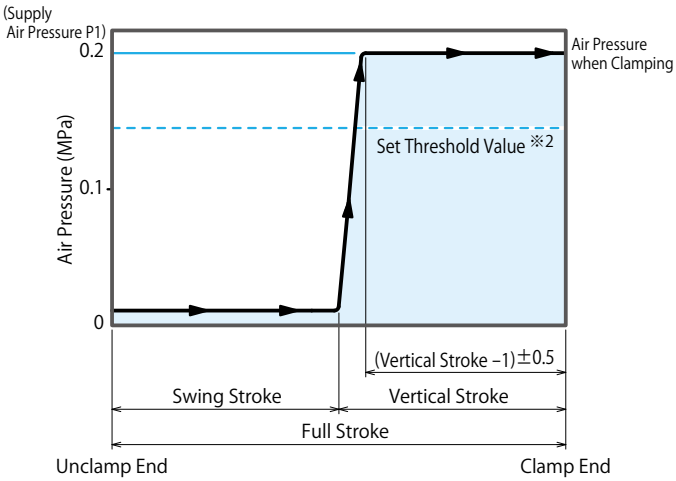

5 J : Unclamp Confirmation

When Connected to 3 Clamps, Supply 0.2MPa Air Pressure

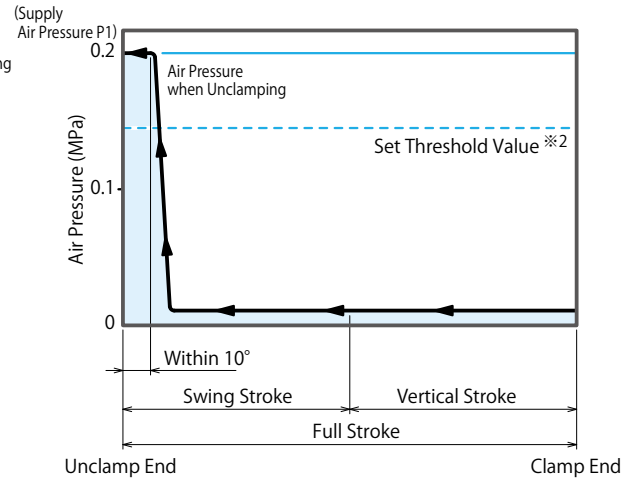

Notes :

1. The sensing chart shows the relationship between the stroke and detection circuit air pressure.
2. The specifications may vary depending on the air circuit construction.
   Because it may affect the responsiveness of the air sensor, use the piping tube with outer diameter ϕ6 (inner diameter ϕ4) for the outgoing side of the sensor and its length should be as short as possible.

※1. Pressure when unclamping may vary depending on the condition of air circuit.
※2. The location of a signal from air sensor output varies depending on the sensor setting.
Set according to using systems. Please refer to manufacturer's instruction manual or other documents for the details about the air sensor.

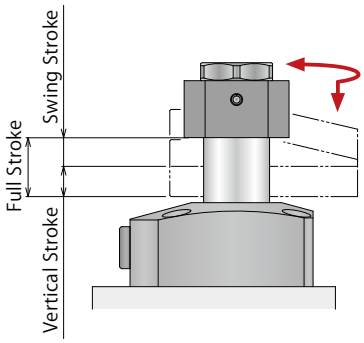

Model No. Indication

LGV 048 0 - C R E

1 2 3 4 5

1 Body Size

040 : φD=40mm
048 : φD=48mm
055 : φD=55mm
065 : φD=65mm
075 : φD=75mm

※ Indicates the cylinder outer diameter (φD).

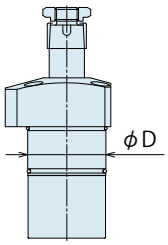

2 Design No.

0 : Revision Number

3 Piping Method

C : Gasket Option (With G Thread Plug)

※ Speed control valve (BZL-A) is sold separately.
Please refer to P. 37.

C

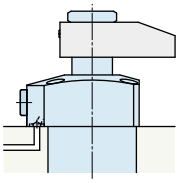

Gasket Option

With G Thread Plug
Able to Attach BZL-A Speed Control Valve

4 Swing Direction when Clamping

R : Clockwise
L : Counter-Clockwise

R

Swing Direction when Clamping

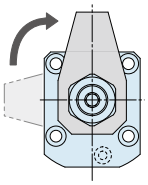

L

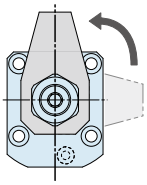

Swing Direction when Clamping

5 Action Confirmation Symbol

E : Clamp - Unclamp Confirmation (Both)
H : Clamp Confirmation Only
J : Unclamp Confirmation Only

Specifications

Model No.		LGV0400-C□□	LGV0480-C□□	LGV0550-C□□	LGV0650-C□□	LGV0750-C□□
Cylinder Area for Clamping	cm²	5.5	7.5	10.3	14.2	21.3
Cylinder Inner Diameter ※1	mm	32	38	44	52	63
Rod Diameter ※1	mm	18	22	25	30	35.5
Clamping Force ※2 (Calculation Formula)	kN	$F=\frac{P-1.22}{2.04+0.0084\times L}$	$F=\frac{P-1.09}{1.45+0.0044\times L}$	$F=\frac{P-1.22}{1.07+0.0033\times L}$	$F=\frac{P-1.22}{0.77+0.0020\times L}$	$F=\frac{P-0.97}{0.51+0.0012\times L}$
Cylinder Capacity	cm³	7.1	10.6	17	25.5	45.7
Full Stroke	mm	13	14	16.5	18	21.5
Swing Stroke (90°)	mm	6	7	8.5	10	11.5
Vertical Stroke	mm	7	7	8	8	10
Swing Angle Accuracy		90° ±3°				
Swing Complete Position Repeatability		±0.5°				
Return Spring Force	kN max.	0.76	0.89	1.41	1.75	2.26
	kN min.	0.45	0.59	0.83	1.08	1.43
Hyd. Pressure: Max. Operating Pressure	MPa	7				
Hyd. Pressure: Min. Operating Pressure ※3	MPa	2.5				
Hyd. Pressure: Withstanding Pressure	MPa	10.5				
Recommended Operating Air Pressure	MPa	0.1 ~ 0.2				
Recommended Air Sensor	5 E ※4	ISA3-G□A, ISA3-G□B (Two-Output Model)：Made by SMC ※4				
	5 H/J	ISA3-G□N, ISA3-G□P (One-Output Model)：Made by SMC / GPS3-E：Made by CKD				
Operating Temperature	℃	0 ~ 70				
Usable Fluid		General Hydraulic Oil Equivalent to ISO-VG-32				
Weight ※5	kg	1	1.3	1.8	2.8	4.3

Notes：※1. Clamping force cannot be calculated from the cylinder inner diameter and rod diameter.
Please refer to the clamping force calculation formula and the clamping force curve.
※2. F：Clamping Force (kN), P：Supply Hydraulic Pressure (MPa),
L：Distance between the piston center and the clamping point (mm).
※3. Minimum pressure to operate the clamp without load.
※4. The number of clamps connected per air sensor is 2 ~ 4 pcs. Please contact us when using an air sensor for one clamp.
※5. It shows the weight of single swing clamp including the nut and the taper sleeve.

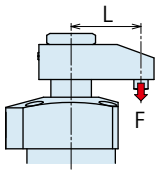

Clamping Force Curve

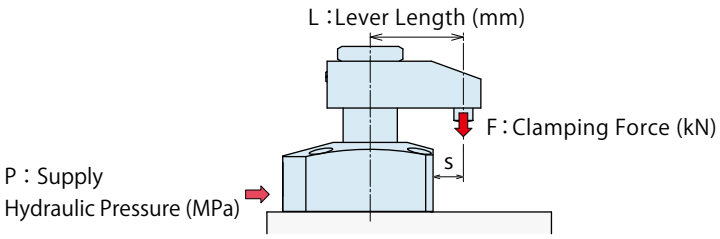

Applicable Model

LGV [ ] **0 - C** [R L] [E H J]

1 Body Size

(Ex.)
In case of LGV0480 : When supply hydraulic pressure P is 5.0MPa and lever length L is 50mm, clamping force becomes about 2.3kN.

Notes :

1. Tables and graphs show the relationship between the clamping force (kN) and supply hydraulic pressure (MPa).
2. Cylinder force (when L=0) cannot be calculated from the formula of clamping force.
3. Lever with a large inertia sometimes does not work depending on supply hydraulic pressure, lever mounting position, etc.
4. Values in below charts indicate clamping force when the lever locks a workpiece in horizontal position.
5. The clamping force varies depending on the lever length. Set the suitable supply hydraulic pressure based on the lever length.
6. Clamping force in the non-usable range may cause deformation, galling and fluid leakage, etc.
7. The tables and graphs are only for reference. The exact results should be calculated based on the clamping force calculation formula.

※1. F：Clamping Force (kN), P：Supply Hydraulic Pressure (MPa), L：Lever Length (mm).

LGV0400

Clamping Force Calculation Formula※1 (kN) $F = (P-1.22) / (2.04+0.0084 \times L)$

Hydraulic Pressure (MPa)	Cylinder Force (kN)	Clamping Force (kN) Lever Length L (mm) L=40	L=50	L=60	L=70	L=80	L=100	L=120	L=150	Max. Lever Length (L) (mm)
7	3.2	2.4	2.4	2.3	2.2					71
6.5	2.9	2.2	2.2	2.1	2.0	2.0				81
6	2.6	2.0	1.9	1.9	1.8	1.8				92
5.5	2.3	1.8	1.7	1.7	1.6	1.6	1.5			108
5	2.1	1.6	1.5	1.5	1.4	1.4	1.3	1.2		130
4.5	1.8	1.4	1.3	1.3	1.3	1.2	1.1	1.1	1.0	150
4	1.5	1.2	1.1	1.1	1.1	1.0	1.0	0.9	0.8	150
3.5	1.2	1.0	0.9	0.9	0.9	0.8	0.8	0.8	0.7	150
3	1.0	0.8	0.7	0.7	0.7	0.7	0.6	0.6	0.5	150
2.5	0.7	0.5	0.5	0.5	0.5	0.5	0.4	0.4	0.4	150
Max. Operating Pressure (MPa)		7.0	7.0	7.0	7.0	6.6	5.7	5.2	4.7	

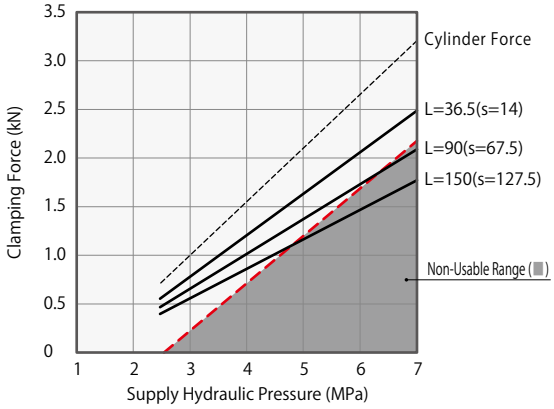

LGV0480

Clamping Force Calculation Formula※1 (kN) $F = (P-1.09) / (1.45+0.0044 \times L)$

Hydraulic Pressure (MPa)	Cylinder Force (kN)	Clamping Force (kN) Lever Length L (mm) L=50	L=60	L=70	L=80	L=100	L=120	L=140	L=150	Max. Lever Length (L) (mm)
7	4.4	3.5	3.5	3.4	3.3					89
6.5	4.0	3.2	3.2	3.1	3.0	2.9				100
6	3.7	2.9	2.9	2.8	2.7	2.6				114
5.5	3.3	2.6	2.6	2.5	2.5	2.3	2.2			132
5	2.9	2.3	2.3	2.2	2.2	2.1	2.0	1.9	1.9	150
4.5	2.5	2.0	2.0	1.9	1.9	1.8	1.7	1.7	1.6	150
4	2.2	1.7	1.7	1.7	1.6	1.5	1.5	1.4	1.4	150
3.5	1.8	1.4	1.4	1.4	1.3	1.3	1.2	1.2	1.1	150
3	1.4	1.1	1.1	1.1	1.1	1.0	1.0	0.9	0.9	150
2.5	1.0	0.8	0.8	0.8	0.8	0.8	0.7	0.7	0.7	150
Max. Operating Pressure (MPa)		7.0	7.0	7.0	7.0	6.5	5.8	5.3	5.1	

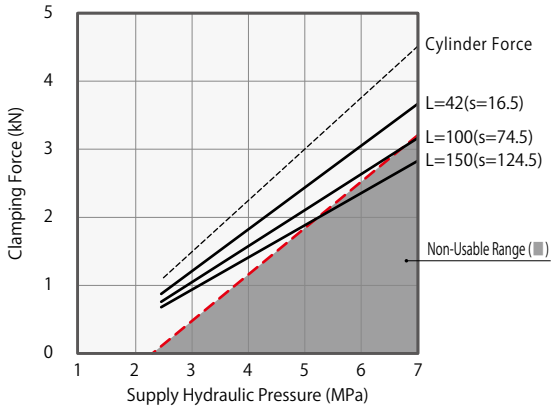

LGV0550

Clamping Force Calculation Formula※1 (kN) $F = (P-1.22) / (1.07+0.0033 \times L)$

Hydraulic Pressure (MPa)	Cylinder Force (kN)	Clamping Force (kN) Lever Length L (mm) L=50	L=60	L=80	L=100	L=120	L=140	L=160	L=200	Max. Lever Length (L) (mm)
7	5.9	4.7	4.6	4.3	4.1					102
6.5	5.4	4.3	4.2	4.0	3.8					115
6	4.9	3.9	3.8	3.6	3.4	3.3				132
5.5	4.4	3.5	3.4	3.2	3.1	2.9	2.8			156
5	3.9	3.1	3.0	2.8	2.7	2.6	2.5	2.4		188
4.5	3.3	2.7	2.6	2.5	2.3	2.2	2.1	2.1	1.9	200
4	2.8	2.3	2.2	2.1	2.0	1.9	1.8	1.7	1.6	200
3.5	2.3	1.9	1.8	1.7	1.6	1.6	1.5	1.4	1.3	200
3	1.8	1.4	1.4	1.3	1.3	1.2	1.2	1.1	1.0	200
2.5	1.3	1.0	1.0	1.0	0.9	0.9	0.8	0.8	0.7	200
Max. Operating Pressure (MPa)		7.0	7.0	7.0	7.0	6.4	5.8	5.4	4.9	

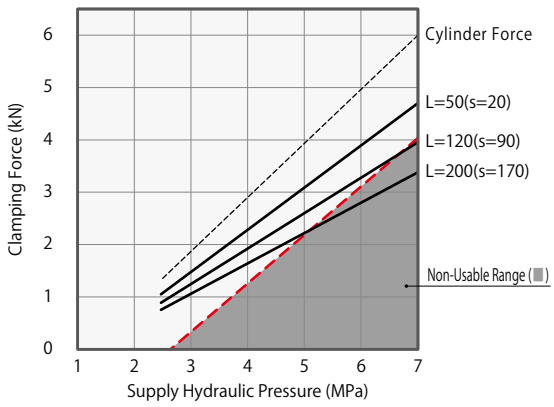

LGV0650

Clamping Force Calculation Formula※1 (kN) F = (P-1.22) ／ (0.77+0.0020×L)

Hydraulic Pressure (MPa)	Cylinder Force (kN)	Clamping Force (kN) Lever Length L (mm) L=50	L=60	L=80	L=100	L=120	L=140	L=160	L=200	Max. Lever Length (L) (mm)
7	8.3	6.6	6.5	6.2	6.0	5.7				126
6.5	7.6	6.1	5.9	5.7	5.4	5.2	5.0			142
6	6.9	5.5	5.4	5.1	4.9	4.7	4.6	4.4		163
5.5	6.2	4.9	4.8	4.6	4.4	4.2	4.1	3.9		191
5	5.5	4.3	4.3	4.1	3.9	3.7	3.6	3.5	3.2	200
4.5	4.8	3.8	3.7	3.5	3.4	3.3	3.1	3.0	2.8	200
4	4.1	3.2	3.1	3.0	2.9	2.8	2.7	2.6	2.4	200
3.5	3.4	2.6	2.6	2.5	2.4	2.3	2.2	2.1	2.0	200
3	2.6	2.1	2.0	1.9	1.8	1.8	1.7	1.6	1.5	200
2.5	1.9	1.5	1.4	1.4	1.3	1.3	1.2	1.2	1.1	200
Max. Operating Pressure (MPa)		7.0	7.0	7.0	7.0	7.0	6.6	6.1	5.4	

Non-Usable Range (■)

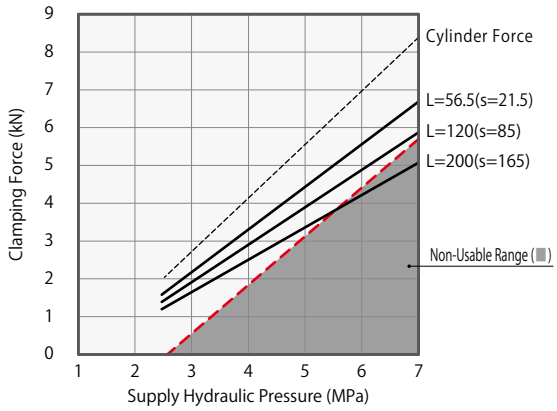

LGV0750

Clamping Force Calculation Formula※1 (kN) F = (P-0.97) ／ (0.51+0.0012×L)

Hydraulic Pressure (MPa)	Cylinder Force (kN)	Clamping Force (kN) Lever Length L (mm) L=50	L=60	L=80	L=100	L=120	L=140	L=160	L=200	Max. Lever Length (L) (mm)
7	12.8	10.6	10.4	10.0	9.6	9.2				134
6.5	11.7	9.7	9.5	9.1	8.8	8.5	8.2			150
6	10.7	8.8	8.6	8.3	8.0	7.7	7.4	7.2		171
5.5	9.6	8.0	7.8	7.5	7.2	6.9	6.7	6.5	6.0	199
5	8.6	7.1	6.9	6.7	6.4	6.2	5.9	5.7	5.4	200
4.5	7.5	6.2	6.1	5.8	5.6	5.4	5.2	5.0	4.7	200
4	6.4	5.3	5.2	5.0	4.8	4.6	4.5	4.3	4.0	200
3.5	5.4	4.4	4.4	4.2	4.0	3.9	3.7	3.6	3.4	200
3	4.3	3.6	3.5	3.4	3.2	3.1	3.0	2.9	2.7	200
2.5	3.2	2.7	2.6	2.5	2.4	2.3	2.3	2.2	2.0	200
Max. Operating Pressure (MPa)		7.0	7.0	7.0	7.0	7.0	6.8	6.3	5.5	

Non-Usable Range (■)

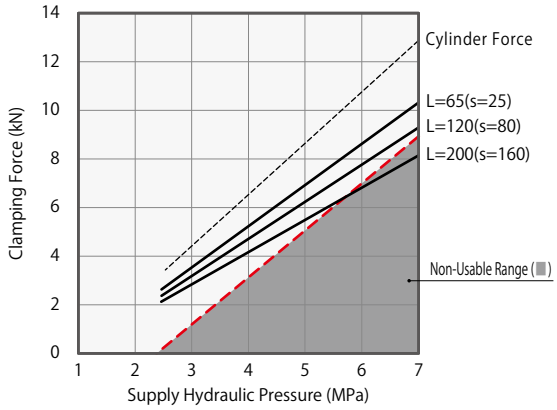

Allowable Swing Time Graph

Adjustment of Swing Time

The graph shows allowable swing time against the moment of inertia of a lever.
An operation time should be longer than the operation time shown in the graph.

Excessive action speed can reduce stopping accuracy and damage internal components.

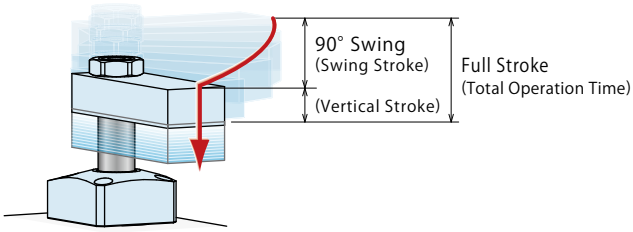

LGV0400

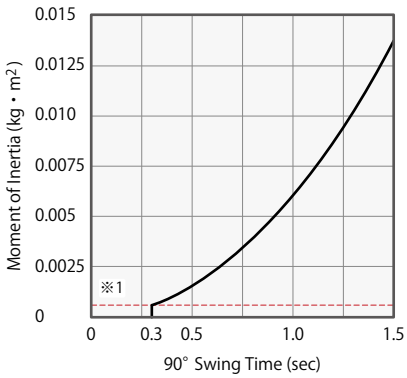

LGV0480

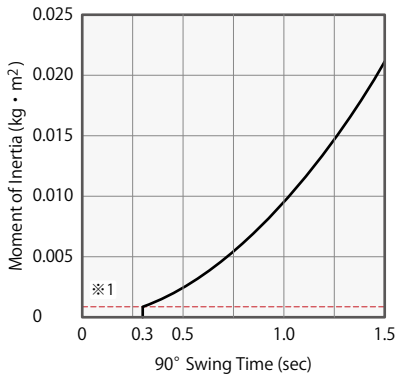

LGV0550

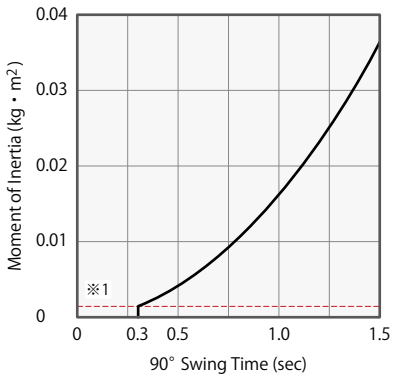

LGV0650

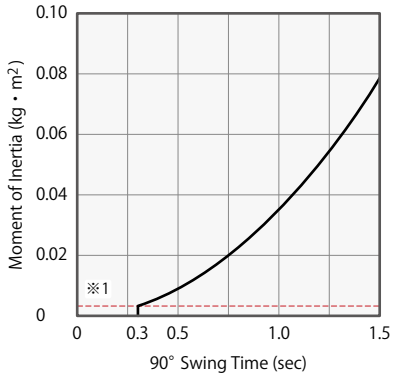

LGV0750

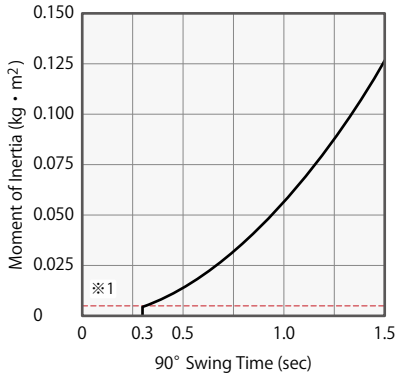

Notes :

※1. It shows the moment of inertia with material lever (LZ□-LE2).

1. The graph shows the 90° swing time in regard to the moment of inertia of lever.
2. Operation time is approximately twice the 90° swing time. Use the calculation formula of the total operation time on the next page to calculate the detailed time.
3. Lever with a large inertia sometimes does not work depending on supply hydraulic pressure, oil flow, lever mounting position, etc.
4. Please adjust the 90° swing time against the moment of inertia of lever to be longer than the indicated time in the above graphs.
5. Excessive swing speed can reduce stopping accuracy and damage the internal parts.
6. The clamping force varies depending on the lever length. Refer to the clamping force curve and set the suitable supply hydraulic pressure based on the lever length.
7. When a clamp is mounted horizontally, a lever may be accelerated by its own weight. The swing time may become faster than the allowable time shown above, and this results in a damage to the clamp. In this case, use meter-out flow control valve for speed adjustment.
8. For any moment of inertia of a lever, the minimum unclamping time should be 0.3 sec.
9. Please contact us if operational conditions differ from those shown on the graphs.

(How to read the allowable operation time graph)

In case of LGV0480

The moment of inertia of a lever : 0.003kg・m²

- 90° Swing Time : About 0.56 sec or more
- Total Operation Time : About 1.12 sec or more

1. The total operation time on the graph represents the allowable operation time when fully stroked.
2. Calculate the operation time with the formula.

Model → **LGV0480**

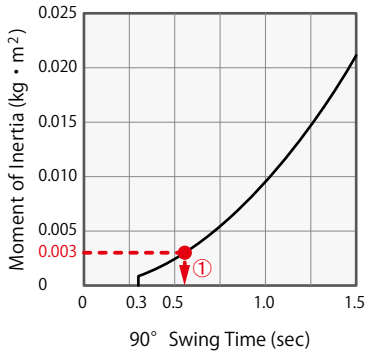

How to Calculate the Moment of Inertia (Estimated)

I : Moment of Inertia (kg・m²) L, L_1, L_2, K, b : Length (m) m, m_1, m_2, m_3 : Weight (kg)

① For a rectangular plate (cuboid), the rotating shaft is vertically on one side of the plate.

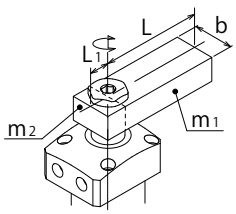

$$I = m_1 \frac{4L^2+b^2}{12} + m_2 \frac{4L_1^2+b^2}{12}$$

② Load is applied on the lever front end.

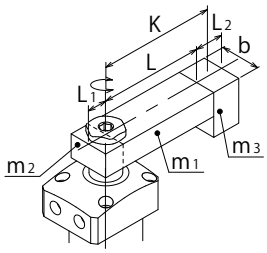

$$I = m_1 \frac{4L^2+b^2}{12} + m_2 \frac{4L_1^2+b^2}{12} + m_3K^2 + m_3 \frac{L_2^2+b^2}{12}$$

Calculation Formula of Total Operation Time

$$\text{Total Operation Time (sec)} = 90^\circ \text{ Swing Time (sec)} \times \frac{\text{Full Stroke (mm)}}{\text{Swing Stroke (mm)}}$$

External Dimensions

(The dimensions are the same for 5 Action Confirmation Symbol E / H / J.)

※The drawing shows the unclamped state of LGV-CR□.

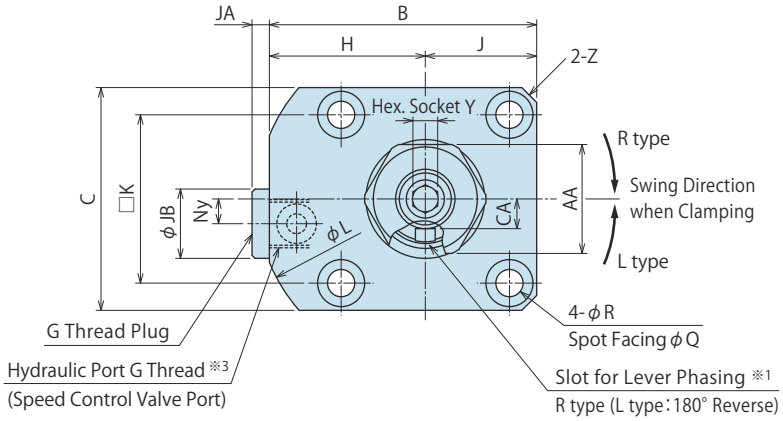

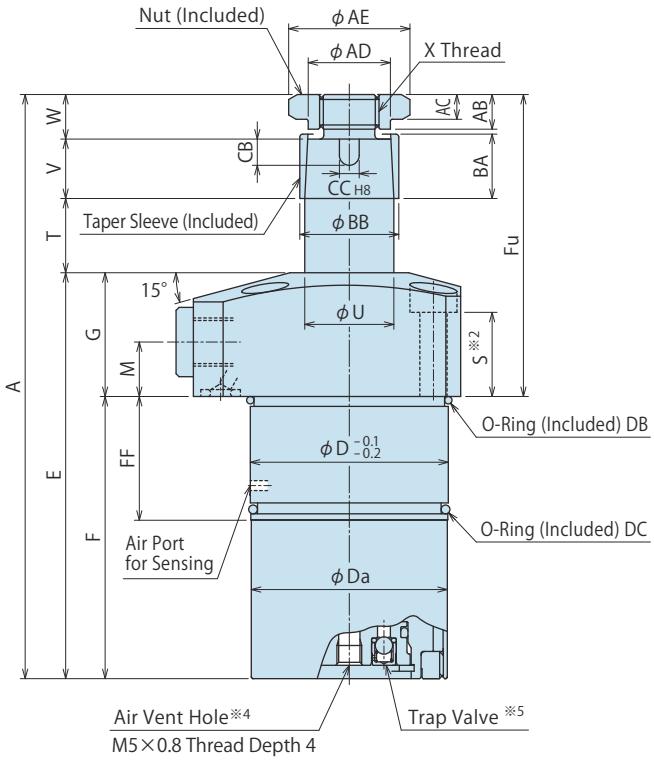

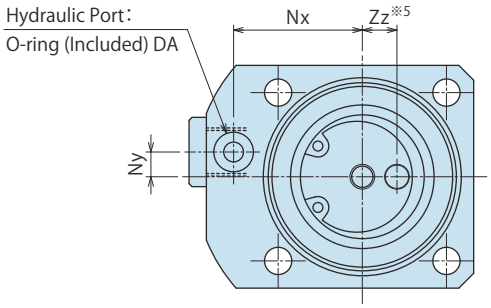

Notes :

※1. The slot for lever phasing faces the port side when clamped.

※2. Mounting bolts are not provided with the product. Please prepare them according to the mounting height referring to dimension 'S'.

※3. Speed control valve is sold separately. Please refer to P.37 for detail.

※4. Please keep clear condition at the air vent hole, and prevent coolant and chips from entering the hole. If exposed to coolant, use the thread and install piping, etc. to prevent contamination, but do not block the air vent hole.

※5. Please keep clear condition at the trap valve. Phasing is not as illustrated in the drawing.

Machining Dimensions of Mounting Area

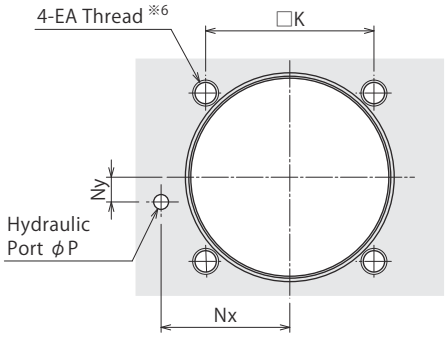

For Blind Hole

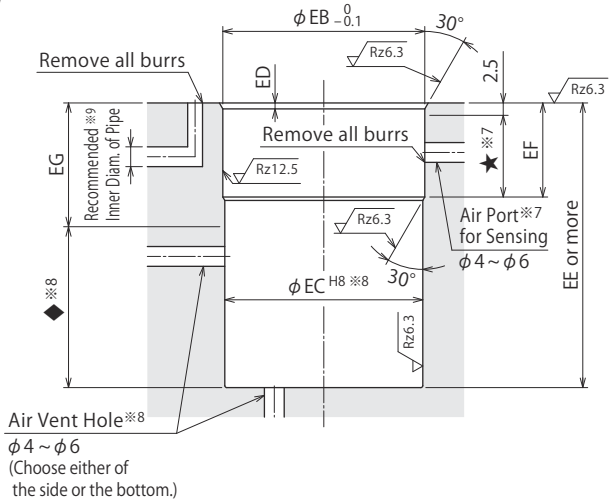

For Through Hole

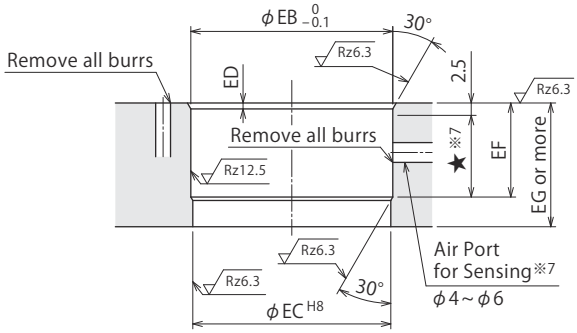

Notes:

※6. EA tapping depth of the mounting bolt should be decided according to the mounting height referring to dimensions 'S'.

※7. Prepare the air port for sensing within the ★ area.

※8. Prepare the vent hole on the side or the bottom. When preparing on the side, it should be within the ◆ area. When preparing on the bottom, it should be within φEC.

Model No. Indication

LGV 048 0 – C R/L E/H/J

1 2 3 4 5

(Format Example：LGV0480-CRE, LGV0750-CLJ)

1 Body Size
2 Design No.
3 Piping Method
4 Swing Direction when Clamping
5 Action Confirmation Symbol

External Dimensions and Machining Dimensions of Mounting

(mm)

Model No.		LGV0400-C□□	LGV0480-C□□	LGV0550-C□□	LGV0650-C□□	LGV0750-C□□
Full Stroke		13	14	16.5	18	21.5
Swing Stroke (90°)		6	7	8.5	10	11.5
Vertical Stroke		7	7	8	8	10
A		118	128	145.5	153.5	182.5
B		54	61	69	81	92
C		45	51	60	70	80
D		40	48	55	65	75
Da		39.6	47.6	54.6	64.6	74.6
E		82	87	95	101.5	119
F		57	59	67	71.5	82
FF		25	25	25	25	30
Fu		61	69	78.5	82	100.5
G		25	28	28	30	37
H		31.5	35.5	39	46	52
J		22.5	25.5	30	35	40
K		34	40	47	55	63
L		68	73	80	94	106
M		11	13	12	13	16
Nx		26	30	33.5	39.5	45
Ny		5	0	0	0	0
P		3	3	3	5	5
Q		9.5	9.5	11	11	14
R		5.5	5.5	6.8	6.8	9
S		17	18.5	17	18	22
T		15	16	18.5	20	23.5
U		18	22	25	30	35.5
V		12	14	20	20	26
W		9	11	12	12	14
X (Nominal × Pitch)		M12×1.5	M16×1.5	M18×1.5	M22×1.5	M28×1.5
Y		5	6	8	10	10
Z (Chamfer)		C3	C3	(ϕ80)	(ϕ94)	(ϕ106)
Zz		7	8	8	10	10
AA		22	24	30	36	41
AB		7	9	10	10	12
AC		5	6	7	7	8
AD		16.6	20.5	22.9	27.9	32.8
AE		24.5	26.5	33	40	45
BA		13	15	21	21	27
BB		20	25	28	34	40
CA		6	8	9	11	14
CB		5.3	5.3	5.3	7.5	7.5
CC		$4^{+0.018}_{0}$	$4^{+0.018}_{0}$	$4^{+0.018}_{0}$	$6^{+0.018}_{0}$	$6^{+0.018}_{0}$
EA (Nominal × Pitch)		M5×0.8	M5×0.8	M6×1	M6×1	M8×1.25
EB		40.8	49	56	66	76
EC		$40^{+0.039}_{0}$	$48^{+0.039}_{0}$	$55^{+0.046}_{0}$	$65^{+0.046}_{0}$	$75^{+0.046}_{0}$
ED		1	1	1	1	1.5
EE		57.5	59.5	67.5	72	82.5
EF		19	19	19	19	24
EG		25	25	25	25	30
JA		3.5	3.5	3.5	4.5	4.5
JB		14	14	14	19	19
Hydraulic Port：G Thread		G1/8	G1/8	G1/8	G1/4	G1/4
O-Ring	DA	OR NBR-90 P5-N(1BP5)	OR NBR-90 P5-N(1BP5)	OR NBR-90 P5-N(1BP5)	OR NBR-90 P7-N(1BP7)	OR NBR-90 P7-N(1BP7)
	DB	38×1.5 (Inner Diam.× Wire Diam.)	AS568-031(70°)	AS568-034(70°)	AS568-037(70°)	AS568-040(70°)
	DC	AS568-028(70°)	AS568-031(70°)	AS568-033(70°)	AS568-036(70°)	AS568-039(70°)
Rcmd. Inner Diam. of Pipe ※9		ϕ6	ϕ6	ϕ6	ϕ8	ϕ8

Note：※9. The recommended inner diameter of pipe is a reference value. Please change it depending on the number of clamps or the length of piping.

Taper Lock Lever Design Dimensions

※ Reference for designing taper lock swing lever.

Corresponding Model No.

LGV [ ] 0 - C [R/L] [E/H/J]

1 Body Size

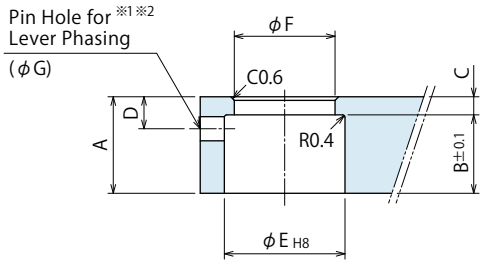

(mm)

Corresponding Model No. ※3	LGV0400	LGV0480	LGV0550	LGV0650	LGV0750
A	16	19	25	25	32
B	13	15	21	21	27
C	3	4	4	4	5
D	5.3	6.3	6.3	7.5	8.5
E	$20^{+0.033}_{0}$	$25^{+0.033}_{0}$	$28^{+0.033}_{0}$	$34^{+0.039}_{0}$	$40^{+0.039}_{0}$
F	$16.7^{+0.15}_{0}$	$20.6^{+0.15}_{0}$	$23^{+0.15}_{0}$	$28^{+0.15}_{0}$	$32.9^{+0.20}_{0}$
G	4	4	4	6	6

Notes：

1. Swing lever should be designed with its length according to performance curve.
2. If the swing lever is not in accordance with the dimensions shown above, performance may be degraded and damage can occur.

※1. The pin hole (φG) for determining the lever phase should be added, if necessary. This is not required if phasing is not needed.

※2. Phasing pin is not included. Prepare it separately.

Accessory：Material Swing Lever for Taper Lock Option

Model No. Indication

LZ 040 0 – LE1

Size (Refer to the table.)

Design No. (Revision Number)

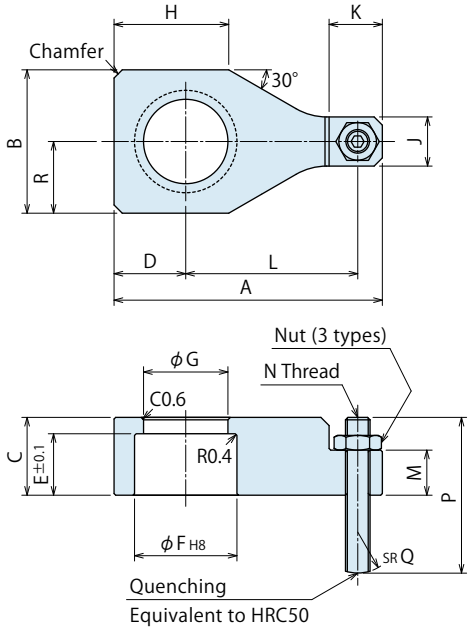

(mm)

Model No.	LZ0400-LE1	LZ0481-LE1※3	LZ0550-LE1	LZ0650-LE1	LZ0750-LE1
Corresponding Model No.	LGV0400	LGV0480	LGV0550	LGV0650	LGV0750
A	56.5	65.5	77	91.5	105
B	28	35	38	50	58
C	16	19	25	25	32
D	14	17.5	19	25	29
E	13	15	21	21	27
F	$20^{+0.033}_{0}$	$25^{+0.033}_{0}$	$28^{+0.033}_{0}$	$34^{+0.039}_{0}$	$40^{+0.039}_{0}$
G	$16.7^{+0.15}_{0}$	$20.6^{+0.15}_{0}$	$23^{+0.15}_{0}$	$28^{+0.15}_{0}$	$32.9^{+0.20}_{0}$
H	24	28	34	40	47
J	12	12	17	19	22
K	13	13	17	22	25
L	36.5	42	50	56.5	65
M	10	11	15	13	16
N	M6×1	M6×1	M8×1.25	M10×1.5	M12×1.75
P	33	38	42	47	52
Q	10	10	15	20	30
R	14	17.5	19	25	29
Chamfer	C1	C1	C1	C3	C4

Notes：
1. Material : S45C　Surface Finishing：Alkaline Blackening
2. When determining the phase, refer to taper lock lever design dimensions for each model for the additional machining.

※3. Only for LZ048, the design number is 1.

Accessory：Material Swing Lever for Taper Lock Option

Model No. Indication

LZ 040 0 – LE2

Size (Refer to the table.)

Design No. (Revision Number)

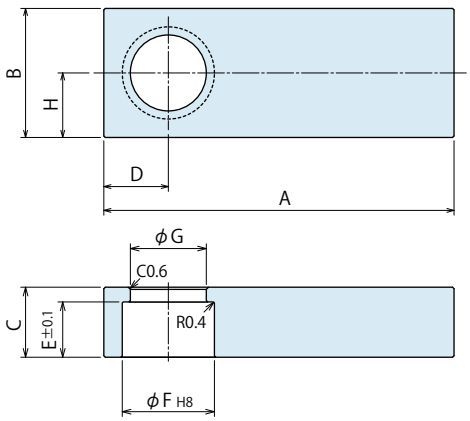

(mm)

Model No.	LZ0400-LE2	LZ0481-LE2※4	LZ0550-LE2	LZ0650-LE2	LZ0750-LE2
Corresponding Model No.	LGV0400	LGV0480	LGV0550	LGV0650	LGV0750
A	90	95	100	120	125
B	28	35	38	50	58
C	16	19	25	25	32
D	14	17.5	19	25	29
E	13	15	21	21	27
F	$20^{+0.033}_{0}$	$25^{+0.033}_{0}$	$28^{+0.033}_{0}$	$34^{+0.039}_{0}$	$40^{+0.039}_{0}$
G	$16.7^{+0.15}_{0}$	$20.6^{+0.15}_{0}$	$23^{+0.15}_{0}$	$28^{+0.15}_{0}$	$32.9^{+0.20}_{0}$
H	14	17.5	19	25	29

Notes：
1. Material : S45C　Surface Finishing：Alkaline Blackening
2. If necessary, the front end should be additionally machined.
3. When determining the phase, refer to taper lock lever design dimensions for each model for the additional machining.

※4. Only for LZ048, the design number is 1.

Cautions

Notes for Design

1) Check Specifications
- Please use each product according to the specifications.

2) Notes for Circuit Design
- Please read "Notes on Hydraulic Cylinder Speed Control Unit" for proper hydraulic circuit design. Improper circuit design may lead to malfunctions and damages. (Refer to P.40.)

3) Swing lever should be designed to make the moment of inertia small.
- Large moment of inertia will degrade the lever's stopping accuracy and cause breakage of the clamp.
  Additionally, the clamp may not function, depending on supplied hydraulic pressure and lever mounting position.
- Set the allowable operation time after the moment of inertia is calculated. Refer to "Allowable Swing Time Graph" and make sure to operate a clamp within the allowable operation time.

4) Protect the exposed area of the piston rod when using on a welding fixture.
- If spatter attaches to the sliding surface it could lead to malfunction and fluid leakage.

5) When clamping on a sloped surface of the workpiece
- Make sure the clamping surface and the mounting surface of the clamp are parallel.

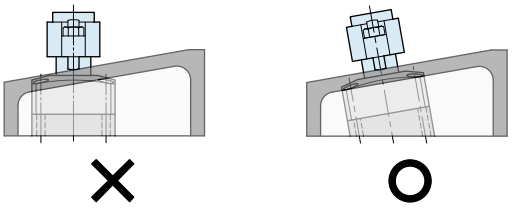

6) Vent Hole and Check Valve of Air Sensor
- When using an air sensor, make sure to check the Notes for Design・Installation・Use on P.5.

Installation Notes

1) Check the Usable Fluid

- Please use the appropriate fluid by referring to the Hydraulic Fluid List (P.39).

2) Swing Speed Adjustment

- Adjust the speed following "Allowable Swing Time Graph". If the clamp operates too fast, the parts will be worn out, leading to premature damage and ultimately complete equipment failure.
- Please make sure to release air from the circuit before adjusting speed. It will be difficult to adjust the speed accurately with air mixed in the circuit.
- Turn the speed control valve gradually from the low-speed side (small flow) to the high-speed side (large flow) to adjust the speed.

3) Installation of the Product

- When mounting the clamp, use hexagonal socket bolts as multiple bolt holes for mounting (with tensile strength of 12.9) and tighten them with the torque shown in the table below. Tightening with greater torque than recommended can dent the seating surface or break the bolt.

Model No.	Mounting Bolt Size	Tightening Torque (N·m)
LGV0400-C□□	M5×0.8	6.3
LGV0480-C□□	M5×0.8	6.3
LGV0550-C□□	M6×1	10
LGV0650-C□□	M6×1	10
LGV0750-C□□	M8×1.25	25

4) Installation / Removal of the Swing Lever

- Oil or debris on the tightened part of the lever or piston rod may cause the rod to loosen. Please clean them thoroughly before installation.
- Tighten the tightening bolt of swing lever with the torque shown below. Tightening with greater torque than recommended can damage the bolt and lever tightening function.

Model No.	Mounting Bolt Size	Tightening Torque (N·m)
LGV0400-C□□	M12×1.5	24 ~ 29
LGV0480-C□□	M16×1.5	37 ~ 45
LGV0550-C□□	M18×1.5	59 ~ 71
LGV0650-C□□	M22×1.5	93 ~ 112
LGV0750-C□□	M28×1.5	147 ~ 177

5) Checking Looseness and Retightening

- At the beginning of the product installation, bolts may be tightened lightly. Check the looseness and re-tighten as required.

※ Please refer to P.39 for common cautions.
・Installation Notes ・Hydraulic Fluid List ・Notes on Hydraulic Cylinder Speed Control Circuit
・Notes on Handling ・Maintenance/Inspection ・Warranty

Air Sensing Link Clamp

Low Pressure : 2.5~7MPa

Link Clamp with Action Confirmation

Hydraulic Single Action

Model LJV

ONLY ONE AIR PORT to confirm clamp and unclamp.

Compact Clamp with Action Confirmation System

PAT.P.

NEW

7MPa Single-Acting Link Clamp with Action Confirmation

3 Options Available

(1) Clamp・Unclamp Confirmation with One Air Port (Option E)

(2) Clamp Confirmation Only (Option H)

(3) Unclamp Confirmation Only (Option J)

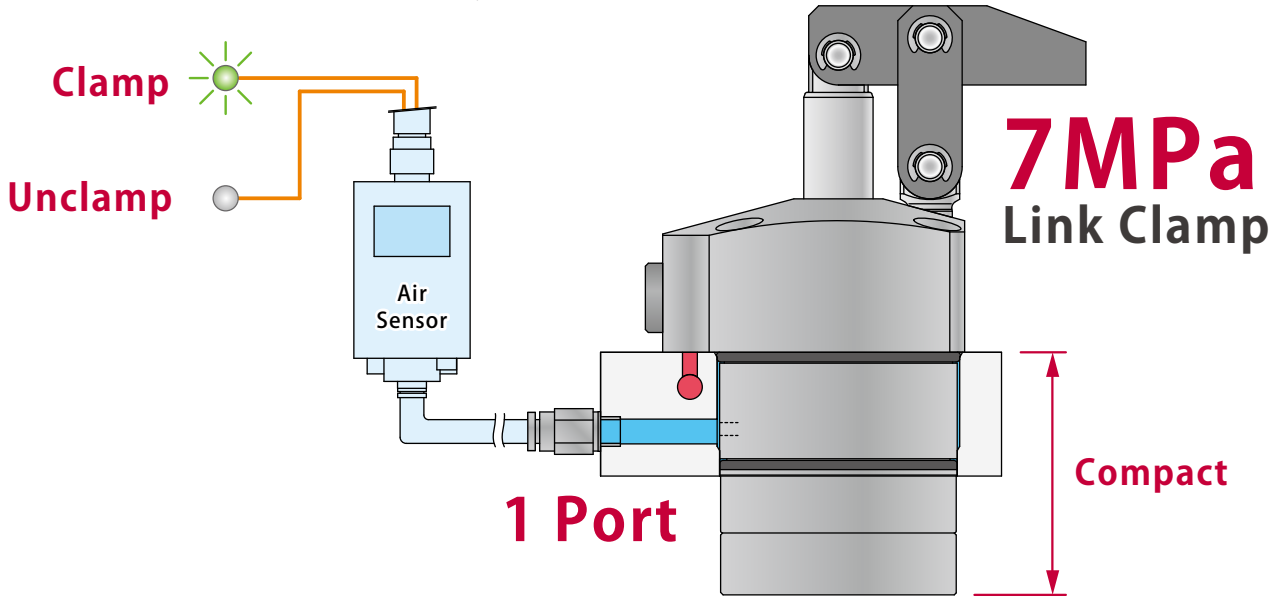

Application Example

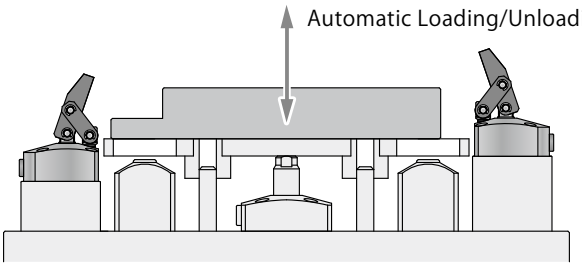

For Automation Line
Requiring Action Confirmation

Features

Direct Mount Speed Control Valve

Speed control valve with air bleeding function can be directly mounted to the product. (Speed control valve is sold separately.)

model BZL-A

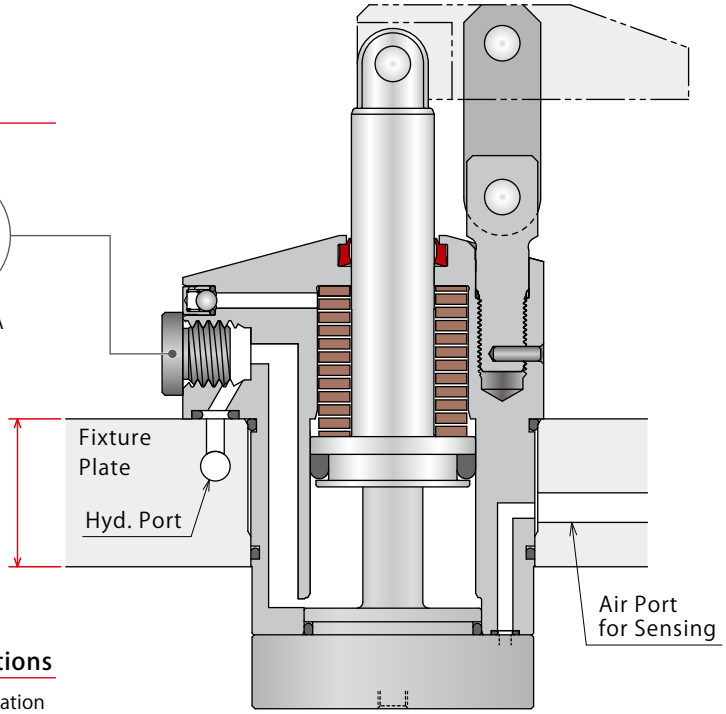

Thin Fixture Plate
Min. Thickness 25mm

The Same Dimensions for All Confirmation Options

Unified dimensions within each would allow multiple confirmation configuration. Common porting simplifies fixture circuit design.

Minimized Number of Sensors

※ In case of option E：Clamp・Unclamp Detection

Only one air sensor is required to check both clamping and unclamping actions. (Required to use a two-output air sensor.)

Reduce the Number of Air Sensors

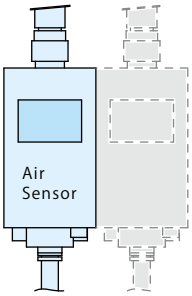

Minimized Number of Ports・Simple Machining

Integrating ports for the sensor allows for reducing the number of both ports of a rotary joint and air passages of a fixture plate. Plus, they can simplify the machining of a mounting hole.

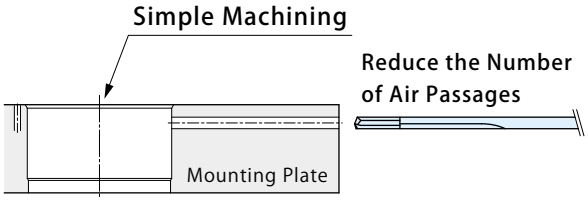

Action Description (Internal Structure)

The figure shows clamp with option 5 E (Clamp - Unclamp Confirmation)

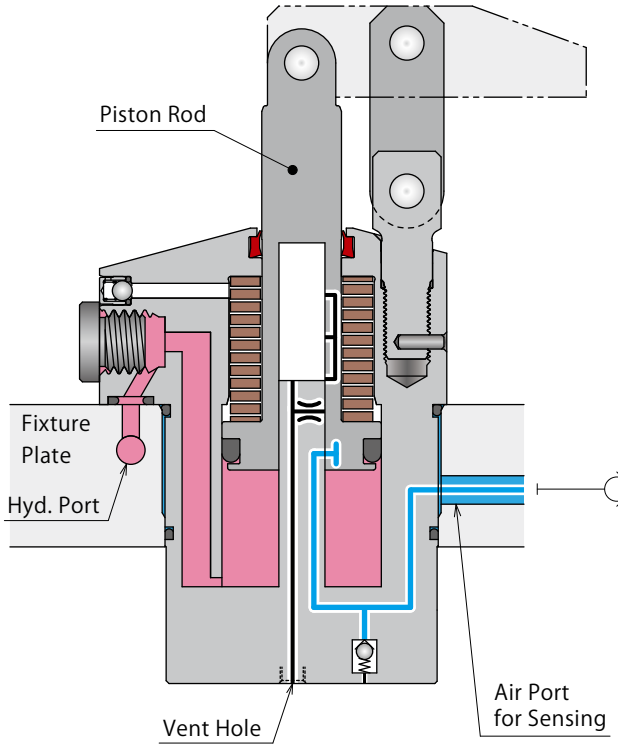

Clamping Action

The piston rod ascends and clamps the workpiece.

Hyd. Pressure	Air Sensor	
Clamp Side	Clamp Check Output 1 (OUT 1)	Unclamp Check Output 2 (OUT 2)
ON	ON	OFF

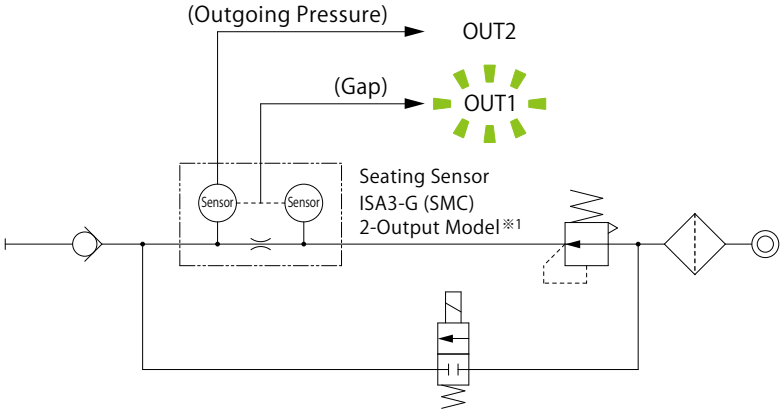

Note :
※1. It is able to use a one-output seating sensor for the action confirmation symbol 5 H/J (one-side action confirmation).

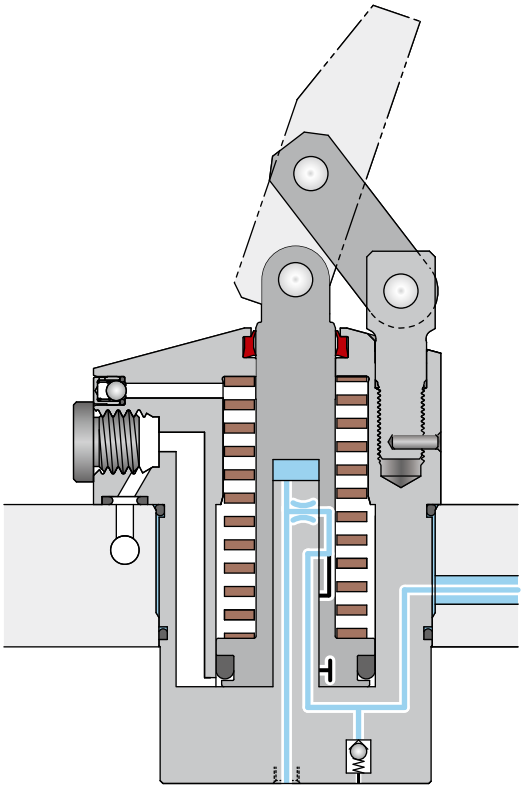

Unclamping Action

The piston rod descends.

Hyd. Pressure	Air Sensor	
Clamp Side	Clamp Check Output 1 (OUT 1)	Unclamp Check Output 2 (OUT 2)
OFF	OFF	ON

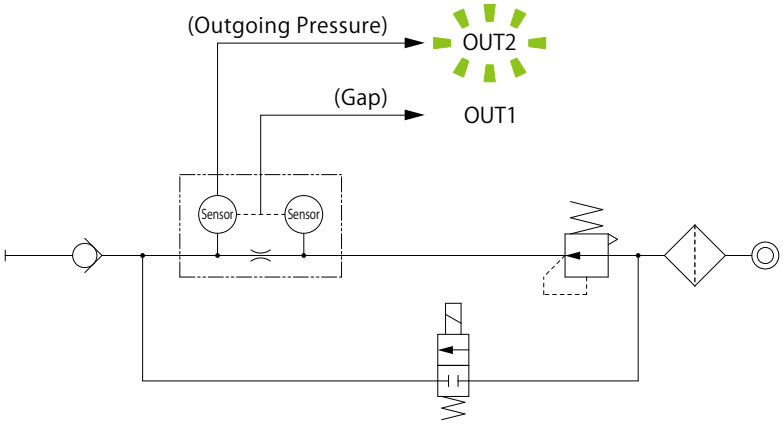

During Clamp/Unclamp Action

The air sensor turns OFF during the stroke action.
The detail of sensor ON/OFF range is shown in Air Sensing Chart on P.24.

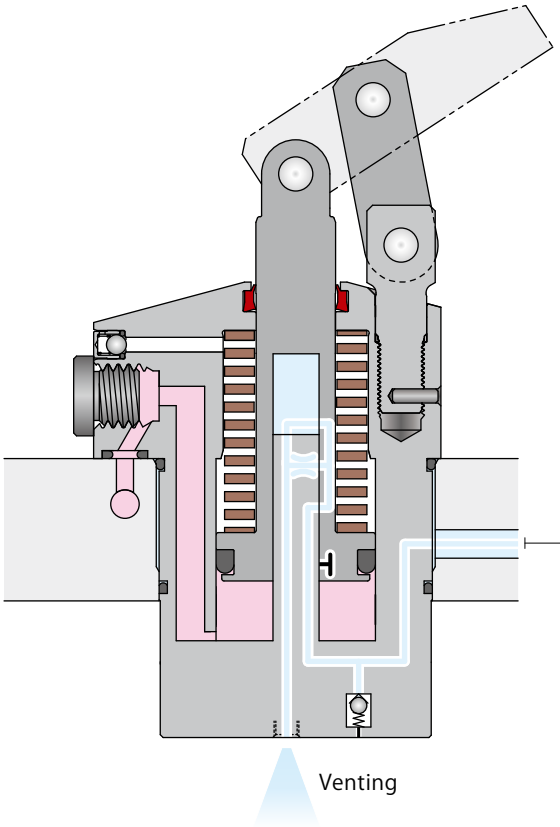

Hyd. Pressure	Air Sensor	
Clamp Side	Clamp Check Output 1 (OUT 1)	Unclamp Check Output 2 (OUT 2)
(OFF)	OFF	OFF

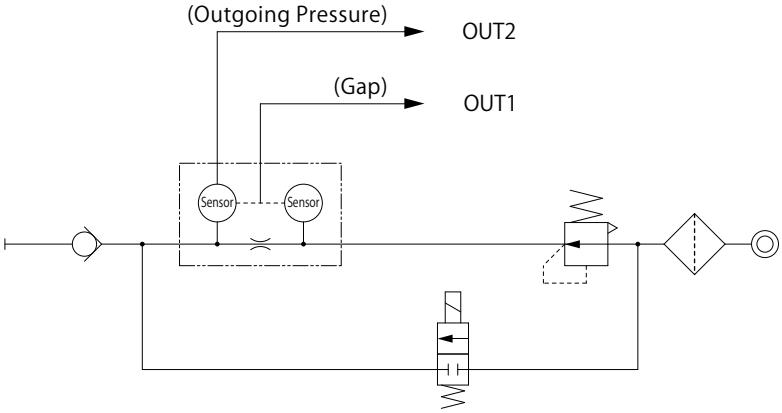

The following shows the actions and the air sensor outputs for the action confirmation symbol 5 H/J.

Action Confirmation	In case of 5 H Clamp Confirmation	In case of 5 J Unclamp Confirmation
Clamping Action	Air Sensor Output ON	Air Sensor Output OFF
Unclamping Action	Air Sensor Output OFF	Air Sensor Output ON
During Clamping/ Unclamping Action	Air Sensor Output OFF	Air Sensor Output OFF

※ When air sensor is ON：No air leakage from the vent hole. When air sensor is OFF：Air releasing from the vent hole.

Action Confirmation and Air Sensing Chart

Action confirmation can be conducted by detecting differential pressure with an air sensor.

Applicable Model

LJV 048 0 - C L C R **E H J**

5 **Action Confirmation Symbol**
E : Clamp - Unclamp Confirmation
H : Clamp Confirmation
J : Unclamp Confirmation

Air Sensor

Recommended Air Sensor

Action Confirmation Symbol	In case of 5 **E**	In case of 5 **H, J**	
Manufacturer	SMC	SMC	CKD
Name	Digital Seating Switch	Digital Seating Switch	Digital Gap Switch
Model No.	ISA3-G□A, ISA3-G□B	ISA3-G□N, ISA3-G□P	GPS3-E
Air Sensor Requirement	**Required to use the 2-output air sensor shown above.**	**Able to use a general 1-output air sensor.**	
Recommended Air Pressure	0.1 ~ 0.2MPa (0.15 ~ 0.2MPa when using 4 clamps.)	0.1 ~ 0.2MPa	

- **In case of 5 E, the number of clamps connected per air sensor : 2 ~ 4 pcs.**
  ※Please contact us when using an air sensor for one clamp.
- In case of 5 **H** and **J**, there is no limitation for the number of clamps connected per air sensor.
- Please refer to manufacturer's catalog or other documents for the details about the air sensor.
- Please keep supplying air pressure when in use.
- Refer to the drawing below for the air circuit structure.
- Please install a check valve (※ part) with low cracking pressure to the detection port of the air sensor.
  (Recommended Check Valve : SMC-made AKH series Cracking Pressure 0.005MPa)

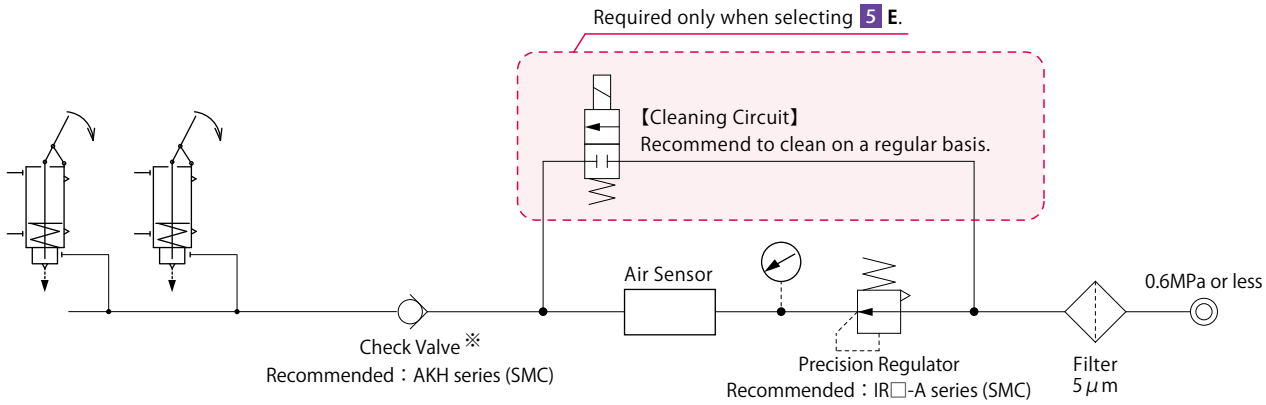

Notes for Design・Installation・Use

- Please keep clear condition at the air vent hole, and prevent coolant and chips from entering the hole. ※
  The air sensor can malfunction if the air vent hole is blocked.

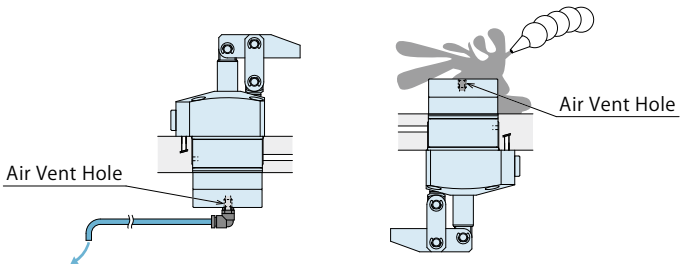

○ Keep clear condition at the air vent hole.

✕ Coolant and chips enter from the air vent hole.

※ The product will be damaged or malfunction due to internal corrosion.

【Prevention of Contaminants to the Air Vent Hole】
Coolant and chips can be prevented by setting a check valve with low cracking pressure. (Recommended Check Valve: SMC-made AKH series, cracking pressure: 0.005MPa)

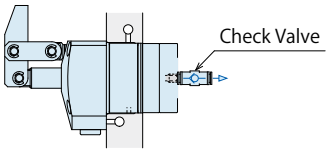

- Keep supplying air pressure to the air port for sensing when in use.

Air Sensing Chart

5 E : Clamp - Unclamp Confirmation

When Connected to 3 Clamps, Supply 0.2MPa Air Pressure

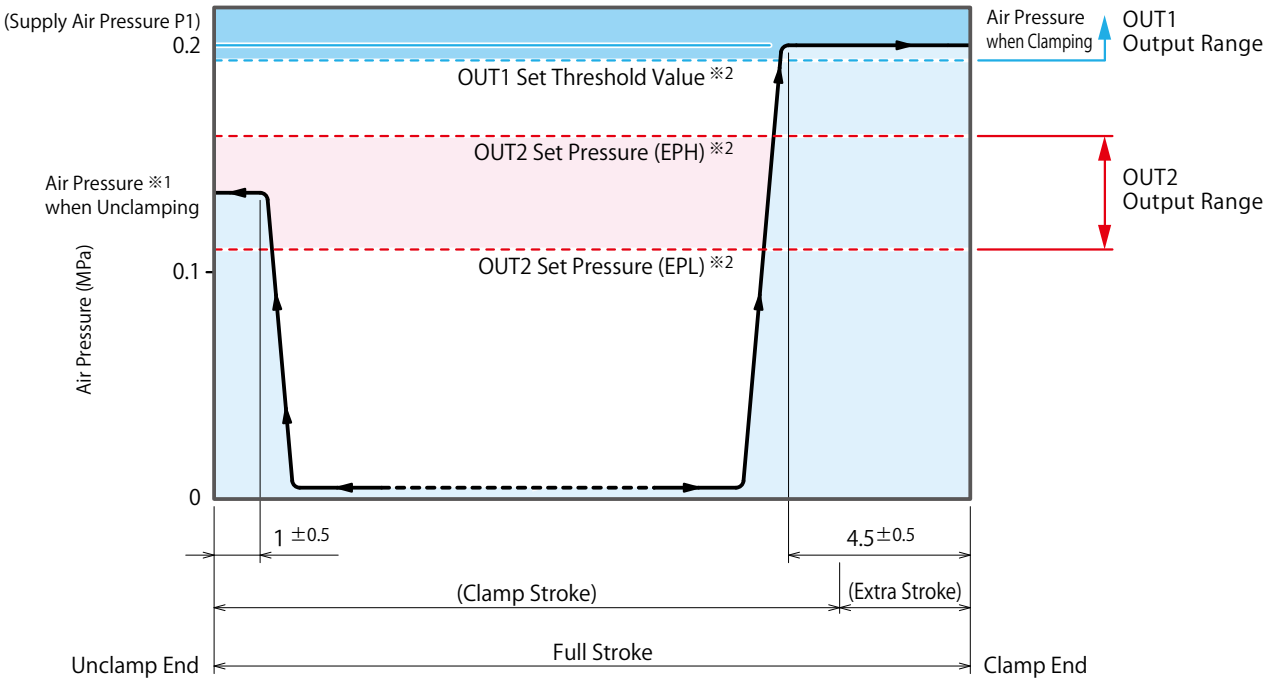

Sensor Setting should be as follows: Detect with OUT1 (Threshold Value) for clamp action confirmation, OUT2 (Pressure Set Value) for unclamp action confirmation. Hysteresis for both OUT1 and OUT2 should be set as 0. Please make sure to use the recommended air sensor.

5 H : Clamp Confirmation

When Connected to 3 Clamps, Supply 0.2MPa Air Pressure

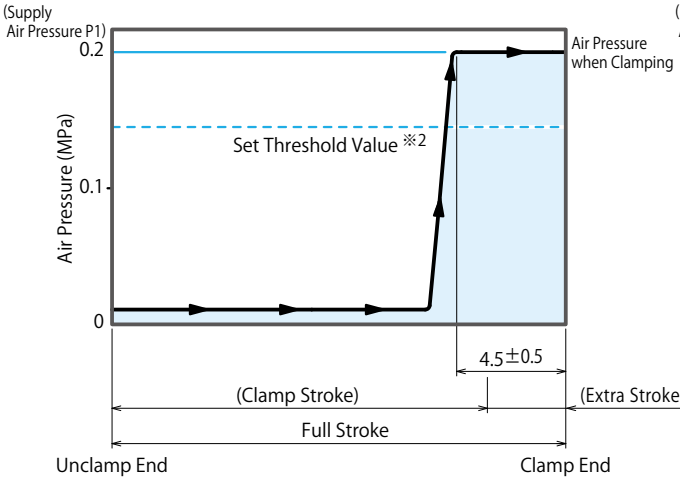

5 J : Unclamp Confirmation

When Connected to 3 Clamps, Supply 0.2MPa Air Pressure

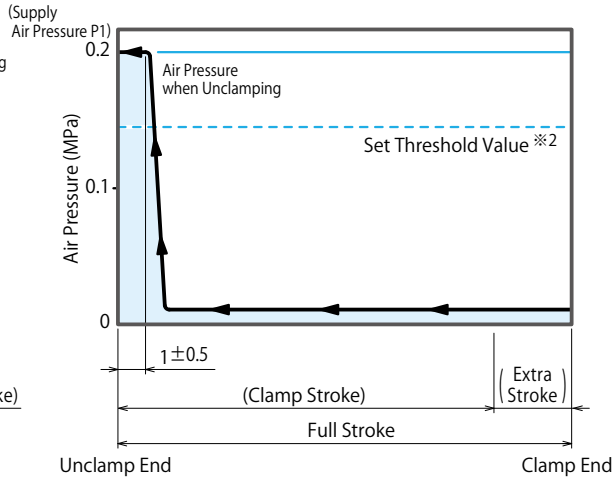

Notes :

1. The sensing chart shows the relationship between the stroke and detection circuit air pressure.
2. The specifications may vary depending on the air circuit construction.
   Because it may affect the responsiveness of the air sensor, use the piping tube with outer diameter $\phi 6$ (inner diameter $\phi 4$) for the outgoing side of the sensor and its length should be as short as possible.

※1. Pressure when unclamping may vary depending on the condition of air circuit.

※2. The location of a signal from air sensor output varies depending on the sensor setting. Set according to using systems. Please refer to manufacturer's instruction manual or other documents for the details about the air sensor.

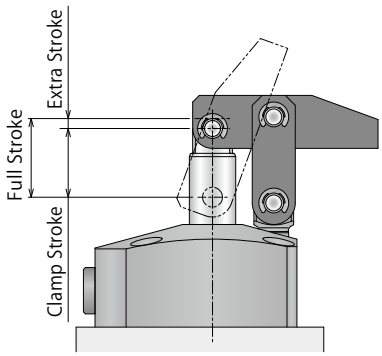

Model No. Indication

LJV 048 0 - C R E

1 2 3 4 5

1 Body Size

040 : φD=40mm
048 : φD=48mm
055 : φD=55mm
065 : φD=65mm
075 : φD=75mm

※ Indicates the cylinder outer diameter (φD).

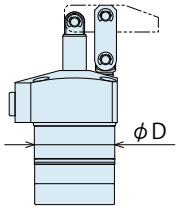

2 Design No.

0 : Revision Number

3 Piping Method

C : Gasket Option (With G Thread Plug)

※ Speed control valve (BZL-A) is sold separately.
Please refer to P. 37.

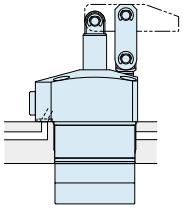

With G Thread Plug
Able to Attach BZL-A Speed Control Valve

4 Lever Direction

L : Left
C : Center
R : Right

※ The images show the lever direction when the piping port is placed in front of you.

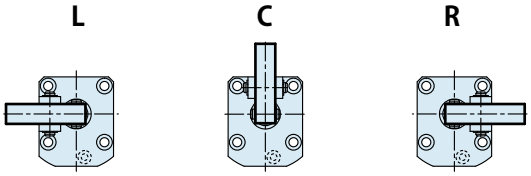

5 Action Confirmation Symbol

E : Clamp - Unclamp Confirmation (Both)
H : Clamp Confirmation Only
J : Unclamp Confirmation Only

Specifications

Model No.		LJV0400-C□□	LJV0480-C□□	LJV0550-C□□	LJV0650-C□□	LJV0750-C□□
Cylinder Area for Clamping	cm^2	4	5.4	8.3	12.7	20.1
Cylinder Inner Diameter ※1	mm	24	28	34	42	52
Rod Diameter ※1	mm	12	14	16	18	22
Clamping Force ※2 (Calculation Formula)	kN	$F=\frac{5.79\times P-2.80}{L-16}$	$F=\frac{8.94\times P-5.62}{L-18.5}$	$F=\frac{15.68\times P-7.49}{L-21}$	$F=\frac{28.06\times P-12.13}{L-24.5}$	$F=\frac{54.29\times P-24.93}{L-30}$
Full Stroke	mm	20.5	23.5	26	29.5	35
Clamp Stroke	mm	17.5	20.5	23	26.5	32
Extra Stroke	mm	3	3	3	3	3
Cylinder Capacity	cm^3	8.2	12.6	21.6	37.5	70.4
Return Spring Force	kN max.	0.21	0.36	0.44	0.58	0.96
	kN min.	0.1	0.17	0.24	0.33	0.49
Hyd. Pressure: Max. Operating Pressure	MPa	7				
Hyd. Pressure: Min. Operating Pressure ※3	MPa	2.5				
Hyd. Pressure: Withstanding Pressure	MPa	10.5				
Recommended Operating Air Pressure	MPa	0.1 ~ 0.2				
Recommended Air Sensor	5 E ※4	ISA3-G□A, ISA3-G□B (Two-Output Model)：Made by SMC ※4				
	5 H/J	ISA3-G□N, ISA3-G□P (One-Output Model)：Made by SMC / GPS3-E：Made by CKD				
Operating Temperature	℃	0 ~ 70				
Usable Fluid		General Hydraulic Oil Equivalent to ISO-VG-32				
Weight ※5	kg	0.9	1.2	1.8	2.5	4

Notes：※1. Clamping force cannot be calculated from the cylinder inner diameter and rod diameter.
Please refer to the clamping force calculation formula and the clamping force curve.
※2. F：Clamping Force (kN), P：Supply Hydraulic Pressure (MPa),
L：Distance between the piston center and the clamping point (mm).
※3. Minimum pressure to operate the clamp without load.
※4. The number of clamps connected per air sensor is 2 ~ 4 pcs.
Please contact us when using an air sensor for one clamp.
※5. It shows the weight of single link clamp without the link lever.

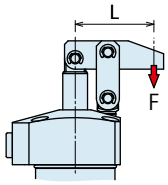

Clamping Force Curve

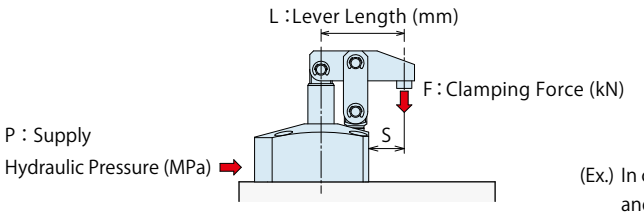

Applicable Model

LJV [ ] 0 - C [L C R] [E H J]

1 Body Size

(Ex.) In case of LJV0480 : When supply hydraulic pressure P is 5.0MPa and lever length L is 50mm, clamping force becomes about 1.2kN.

Notes :

1. Tables and graphs show the relationship between the clamping force (kN) and supply hydraulic pressure (MPa).
2. Cylinder force (when L=0) cannot be calculated from the formula of clamping force.
3. Clamping force in the non-usable range may cause deformation, galling and fluid leakage, etc.

※1. F : Clamping Force (kN), P : Supply Hydraulic Pressure (MPa), L : Lever Length (mm).

LJV0400 Clamping Force Calculation Formula ※1 (kN) $F = (5.79 \times P - 2.80) / (L - 16)$

Hydraulic Pressure (MPa)	Cylinder Force (kN)	Clamping Force (kN) Non-Usable Range (■) Lever Length L (mm)								Min. Lever Length (L) (mm)
		L=25	L=30	L=36.5	L=40	L=50	L=60	L=80	L=100	
7	2.6		2.7	1.8	1.6	1.1	0.9	0.6	0.4	30
6.5	2.4		2.5	1.7	1.5	1.0	0.8	0.5	0.4	28
6	2.2		2.3	1.6	1.3	0.9	0.7	0.5	0.4	26
5.5	2.0	3.2	2.1	1.4	1.2	0.9	0.7	0.5	0.3	25
5	1.8	2.9	1.9	1.3	1.1	0.8	0.6	0.4	0.3	23
4.5	1.6	2.6	1.7	1.1	1.0	0.7	0.5	0.4	0.3	23
4	1.4	2.3	1.5	1.0	0.8	0.6	0.5	0.3	0.2	23
3.5	1.2	1.9	1.2	0.9	0.7	0.5	0.4	0.3	0.2	23
3	1.0	1.6	1.0	0.7	0.6	0.4	0.3	0.2	0.2	23
2.5	0.8	1.3	0.8	0.6	0.5	0.3	0.3	0.2	0.1	23
Max. Operating Pressure (MPa)		5.6	7.0	7.0	7.0	7.0	7.0	7.0	7.0	

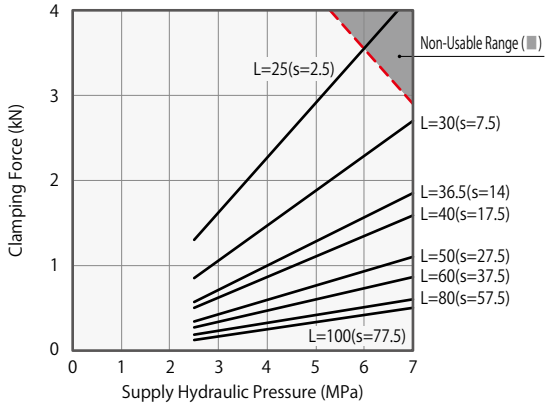

LJV0480 Clamping Force Calculation Formula ※1 (kN) $F = (8.94 \times P - 5.62) / (L - 18.5)$

Hydraulic Pressure (MPa)	Cylinder Force (kN)	Clamping Force (kN) Non-Usable Range (■) Lever Length L (mm)								Min. Lever Length (L) (mm)
		L=30	L=35	L=42	L=50	L=60	L=80	L=100	L=120	
7	3.4			2.4	1.8	1.4	0.9	0.7	0.6	36
6.5	3.2		3.2	2.2	1.7	1.3	0.9	0.6	0.5	33
6	2.9		2.9	2.0	1.5	1.2	0.8	0.6	0.5	31
5.5	2.6	3.8	2.6	1.9	1.4	1.0	0.7	0.5	0.4	29
5	2.3	3.4	2.4	1.7	1.2	0.9	0.6	0.5	0.4	27
4.5	2.1	3.0	2.1	1.5	1.1	0.8	0.6	0.4	0.3	26
4	1.8	2.6	1.8	1.3	1.0	0.7	0.5	0.4	0.3	26
3.5	1.5	2.2	1.6	1.1	0.8	0.6	0.4	0.3	0.3	26
3	1.3	1.8	1.3	0.9	0.7	0.5	0.3	0.3	0.2	26
2.5	1.0	1.5	1.0	0.7	0.5	0.4	0.3	0.2	0.2	26
Max. Operating Pressure (MPa)		5.8	7.0	7.0	7.0	7.0	7.0	7.0	7.0	

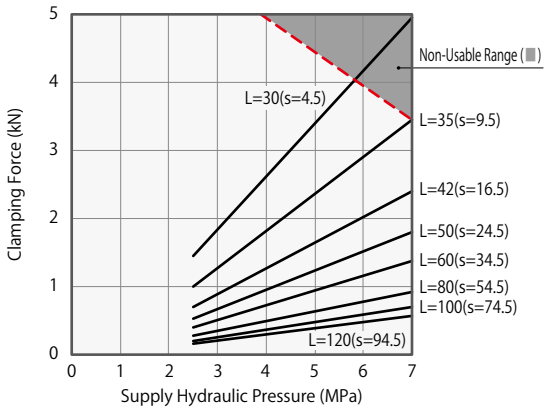

LJV0550

Clamping Force Calculation Formula ※1 (kN) $F = (15.68 \times P - 7.49) / (L - 21)$

Hydraulic Pressure (MPa)	Cylinder Force (kN)	Clamping Force (kN) Lever Length L (mm) Non-Usable Range (■)								Min. Lever Length (L) (mm)
		L=35	L=40	L=50	L=60	L=70	L=80	L=100	L=120	
7	5.4			3.5	2.6	2.1	1.7	1.3	1.0	44
6.5	5.0			3.3	2.4	1.9	1.6	1.2	1.0	41
6	4.6		4.6	3.0	2.2	1.8	1.5	1.1	0.9	37
5.5	4.2	5.6	4.1	2.7	2.0	1.6	1.3	1.0	0.8	35
5	3.8	5.1	3.7	2.4	1.8	1.4	1.2	0.9	0.7	33
4.5	3.3	4.5	3.3	2.2	1.6	1.3	1.1	0.8	0.6	31
4	2.9	3.9	2.9	1.9	1.4	1.1	0.9	0.7	0.6	30
3.5	2.5	3.4	2.5	1.6	1.2	1.0	0.8	0.6	0.5	30
3	2.1	2.8	2.1	1.4	1.0	0.8	0.7	0.5	0.4	30
2.5	1.7	2.3	1.7	1.1	0.8	0.6	0.5	0.4	0.3	30
Max. Operating Pressure (MPa)		5.5	6.4	7.0	7.0	7.0	7.0	7.0	7.0	

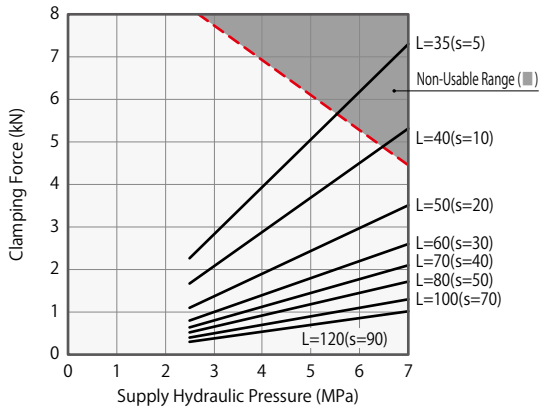

LJV0650

Clamping Force Calculation Formula ※1 (kN) $F = (28.06 \times P - 12.13) / (L - 24.5)$

Hydraulic Pressure (MPa)	Cylinder Force (kN)	Clamping Force (kN) Lever Length L (mm) Non-Usable Range (■)								Min. Lever Length (L) (mm)
		L=40	L=50	L=56.5	L=80	L=100	L=120	L=140	L=160	
7	8.4			5.8	3.3	2.4	1.9	1.6	1.4	51
6.5	7.7		6.7	5.3	3.1	2.3	1.8	1.5	1.3	47
6	7.1		6.1	4.9	2.8	2.1	1.6	1.4	1.2	43
5.5	6.5		5.6	4.4	2.6	1.9	1.5	1.2	1.1	41
5	5.8	8.3	5.0	4.0	2.3	1.7	1.3	1.1	1.0	38
4.5	5.2	7.4	4.5	3.6	2.1	1.5	1.2	1.0	0.8	36
4	4.5	6.5	3.9	3.1	1.8	1.3	1.0	0.9	0.7	35
3.5	3.9	5.6	3.4	2.7	1.6	1.1	0.9	0.7	0.6	35
3	3.3	4.6	2.8	2.3	1.3	1.0	0.8	0.6	0.5	35
2.5	2.6	3.7	2.3	1.8	1.1	0.8	0.6	0.5	0.4	35
Max. Operating Pressure (MPa)		5.4	6.9	7.0	7.0	7.0	7.0	7.0	7.0	

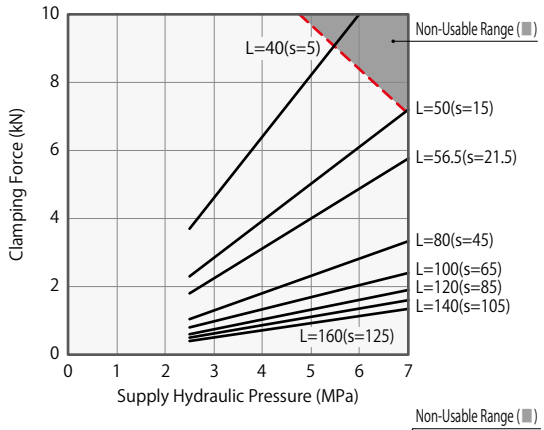

LJV0750

Clamping Force Calculation Formula ※1 (kN) $F = (54.29 \times P - 24.93) / (L - 30)$

Hydraulic Pressure (MPa)	Cylinder Force (kN)	Clamping Force (kN) Lever Length L (mm) Non-Usable Range (■)								Min. Lever Length (L) (mm)
		L=50	L=60	L=67.5	L=80	L=100	L=120	L=140	L=160	
7	13.2			9.5	7.1	5.1	3.9	3.2	2.7	63
6.5	12.2		10.9	8.7	6.6	4.7	3.6	3.0	2.5	58
6	11.1		10.0	8.0	6.0	4.3	3.3	2.7	2.3	53
5.5	10.1	13.7	9.1	7.3	5.5	3.9	3.0	2.5	2.1	50
5	9.1	12.3	8.2	6.6	4.9	3.5	2.7	2.2	1.9	47
4.5	8.1	11.0	7.3	5.9	4.4	3.1	2.4	2.0	1.7	44
4	7.1	9.6	6.4	5.1	3.8	2.7	2.1	1.7	1.5	43
3.5	6.1	8.3	5.5	4.4	3.3	2.4	1.8	1.5	1.3	43
3	5.1	6.9	4.6	3.7	2.8	2.0	1.5	1.3	1.1	43
2.5	4.1	5.5	3.7	3.0	2.2	1.6	1.2	1.0	0.9	43
Max. Operating Pressure (MPa)		5.5	6.7	7.0	7.0	7.0	7.0	7.0	7.0	

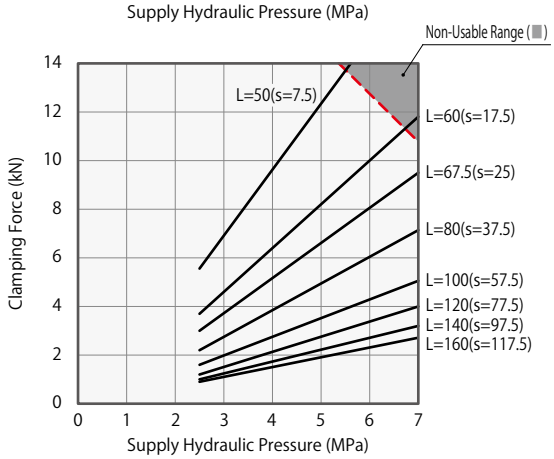

Allowable Offset Graph

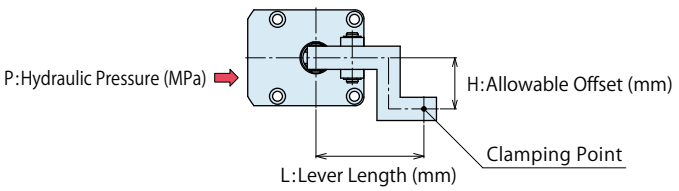

Applicable Model

LJV [ ] 0 - C [L/C/R] [E/H/J]

1 Body Size

(Ex.) When using LJV0480
Supply Hydraulic Pressure 5.0MPa, Lever Length L=80mm, Allowable Offset is about 19mm.

Notes:
1. Tables and graphs shown are the relationships between the lever length (mm) for supply hydraulic pressure (MPa) and the allowable offset (mm).
2. Using the lever beyond allowable offset may cause deformation, galling and fluid leakage etc.
3. The tables and graphs are only for reference. The design should be carried out with allowance fully taken into consideration.

LJV0400

Hydraulic Pressure (MPa)	Allowable Offset H (mm) Non-Usable Range (▒) Lever Length L (mm)							
	L=25	L=30	L=36.5	L=40	L=50	L=60	L=80	L=100
7	▒	▒	2	2	3	3	4	5
6	▒	4	5	5	6	8	11	13
5	7	8	10	11	13	16	21	26
3.5	12	14	17	19	23	28	37	47

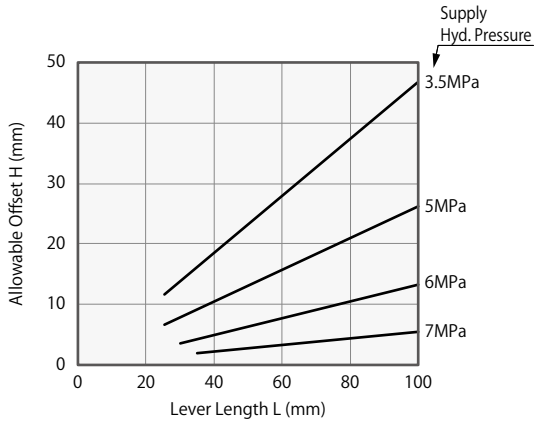

LJV0480

Hydraulic Pressure (MPa)	Allowable Offset H (mm) Non-Usable Range (▒) Lever Length L (mm)							
	L=30	L=35	L=42	L=50	L=60	L=80	L=100	L=120
7	▒	▒	2	2	3	4	5	6
6	▒	4	5	6	7	9	12	14
5	7	8	10	12	14	19	23	28
3.5	13	15	17	20	24	32	40	48

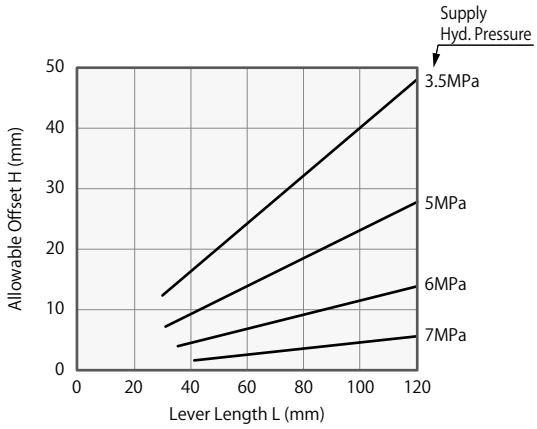

LJV0550

Hydraulic Pressure (MPa)	Allowable Offset H (mm) Non-Usable Range (▒) Lever Length L (mm)							
	L=35	L=40	L=50	L=60	L=70	L=80	L=100	L=120
7	▒	▒	3	3	4	5	6	7
6	▒	6	7	8	10	11	13	16
5	9	11	13	16	19	22	27	32
3.5	17	19	24	28	33	38	47	57

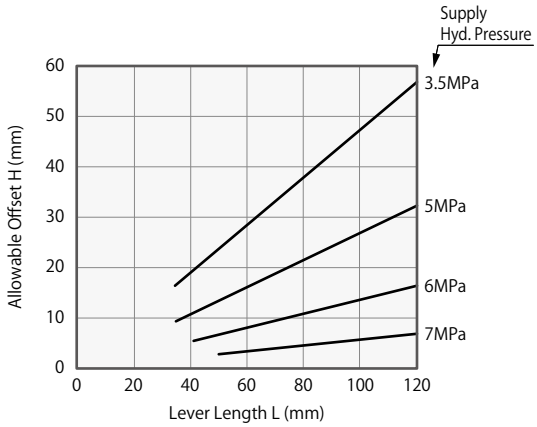

LJV0650

Hydraulic Pressure (MPa)	Allowable Offset H (mm) Non-Usable Range (■) Lever Length L (mm)							
	L=40	L=50	L=56.5	L=80	L=100	L=120	L=140	L=160
7	■	■	4	5	6	7	8	9
6	■	8	9	12	15	18	21	24
5	■	15	17	24	30	36	42	48
3.5	21	27	30	42	52	62	73	83

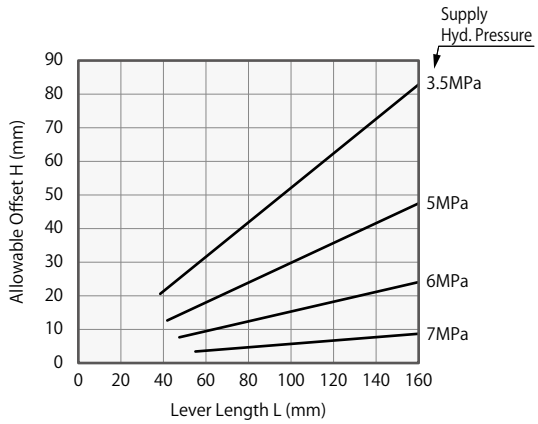

LJV0750

Hydraulic Pressure (MPa)	Allowable Offset H (mm) Non-Usable Range (■) Lever Length L (mm)							
	L=50	L=60	L=67.5	L=80	L=100	L=120	L=140	L=160
7	■	■	5	5	7	8	9	10
6	■	8	9	11	14	16	19	22
5	■	16	18	22	27	33	38	44
3.5	24	29	33	38	47	57	66	75

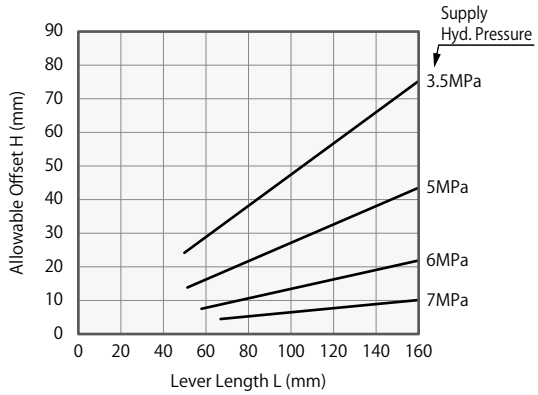

External Dimensions

(The dimensions are the same for 5 Action Confirmation Symbol E / H / J.)

※The drawing shows the clamped state of LJV-CC□.

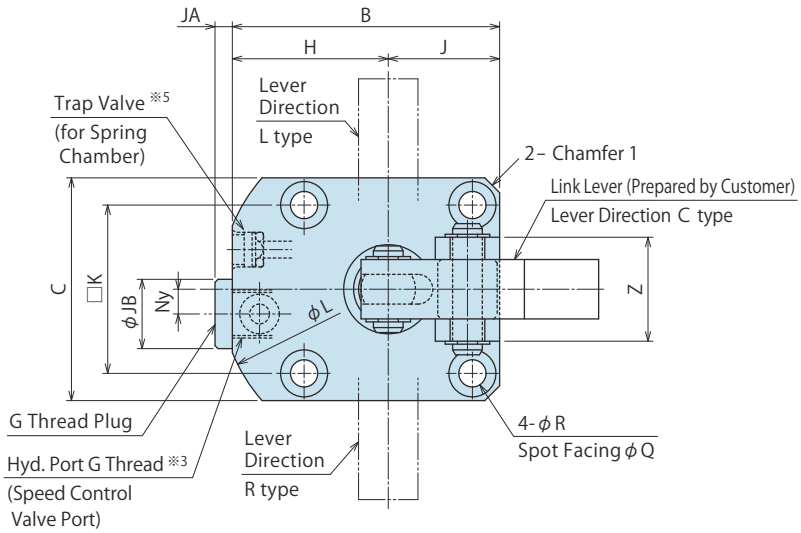

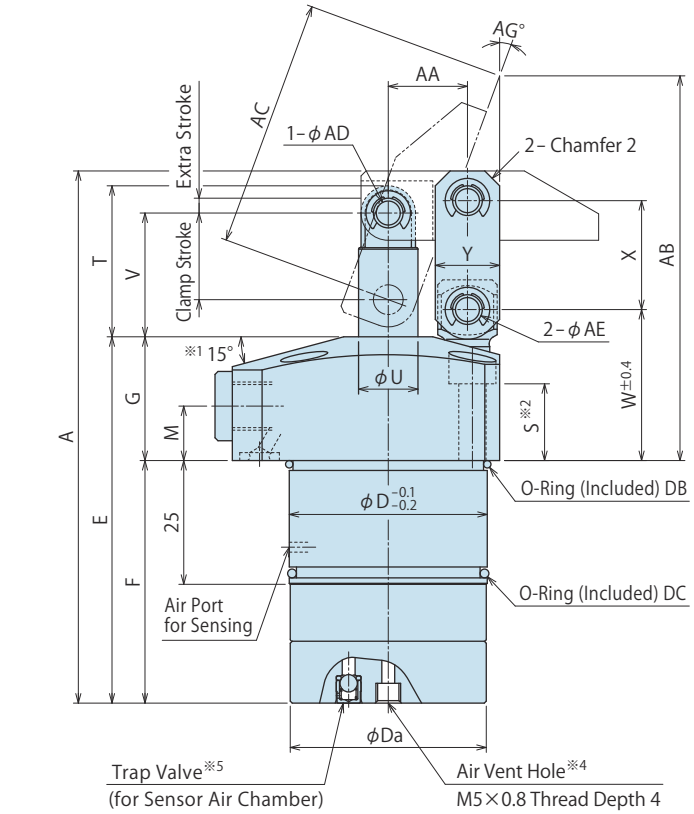

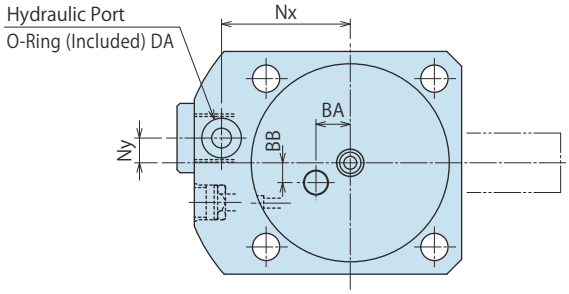

Machining Dimensions of Mounting Area

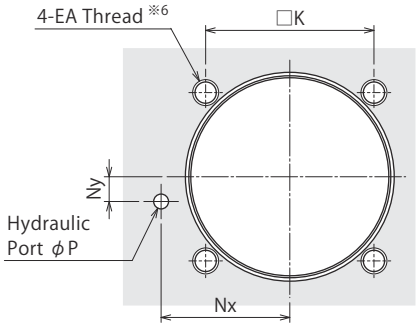

For Blind Hole

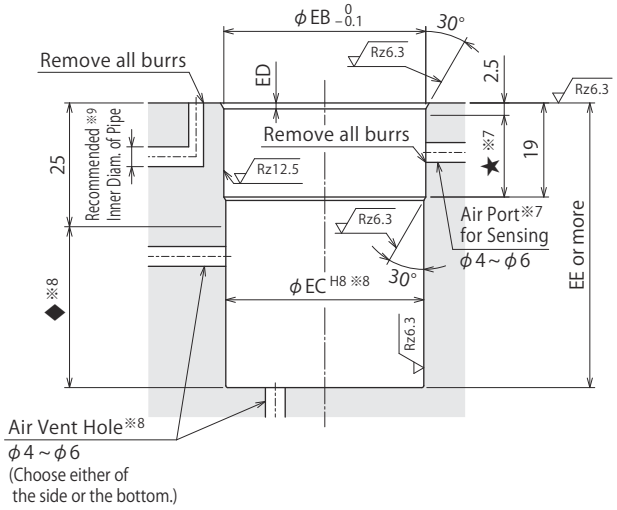

For Through Hole

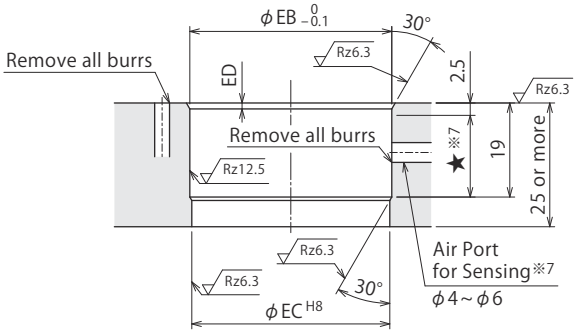

Notes :

※6. EA tapping depth of the mounting bolt should be decided according to the mounting height referring to dimensions 'S'.

※7. Prepare the air port for sensing within the ★ area.

※8. Prepare the vent hole on the side or the bottom.
When preparing on the side, it should be within the ◆ area.
When preparing on the bottom, it should be within φEC.

Notes :

※ 1. Flange inclination angle is 12° only for LJV0650.

※ 2. Mounting bolts are not provided with the product. Please prepare them according to the mounting height referring to dimension 'S'.

※ 3. Speed control valve is sold separately. Please refer to P.37 for detail.

※ 4. Please keep clear condition at the air vent hole, and prevent coolant and chips from entering the hole.
If exposed to coolant, use the thread and prepare piping to prevent coolant and chips, but do not block the air vent hole.

※ 5. Please keep clear condition at the trap valve.
1. Please use the provided pin (equivalent to φADf6, φAEf6, HRC60) as mounting pin for lever.

Model No. Indication

LJV 048 0 – C [C/L/R] [E/H/J]

1 2 3 4 5

(Format Example：LJV0480-CCE, LJV0750-CLJ)

1 Body Size
2 Design No.
3 Piping Method
4 Lever Direction
5 Action Confirmation Symbol

External Dimensions and Machining Dimensions of Mounting

(mm)

Model No.		LJV0400-C□□	LJV0480-C□□	LJV0550-C□□	LJV0650-C□□	LJV0750-C□□
Full Stroke		20.5	23.5	26	29.5	35
Clamp Stroke		17.5	20.5	23	26.5	32
Extra Stroke		3	3	3	3	3
A		107.5	119	135	148.5	175
B		54	61	69	81	94.5
C		45	51	60	70	85
D		40	48	55	65	75
Da		39.6	47.6	54.6	64.6	74.6
E		74	80	89.5	94.5	108
F		49	52	61.5	64.5	71
G		25	28	28	30	37
H		31.5	35.5	39	46	52
J		22.5	25.5	30	35	42.5
K		34	40	47	55	63
L		68	73	80	94	106
M		11	12	12	13	16
Nx		26	30	33.5	39.5	45
Ny		5	0			
P		3			5	
Q		9.5		11		14
R		5.5		6.8		9
S		15.5	17.5	15	15.5	19.5
T		30.5	35	37.5	45	55
U		12	14	16	18	22
V		25	29	31.5	37	45
W		30.5	34.5	35.5	39	48
X		22	26	30	35.5	43.5
Y		13	13	16	19	25
Z		21	21	28	37	40
Chamfer 1		C3	C3	(ϕ80)	(ϕ94)	(ϕ106)
Chamfer 2		C3	C3	C3	C5	C5
AA		16	18.5	21	24.5	30
AB		77.7	92.4	101.9	111.4	130.8
AC		50.2	61.2	71.7	78.7	90.8
AD		6	6	6	8	10
AE		6	6	8	10	12
AG		20.2	18.9	19.9	20.5	21.4
BA		6.9	4	4	4	7.1
BB		4	6.9	6.9	6.9	7.1
EA (Nominal×Pitch)		M5×0.8		M6×1		M8×1.25
EB		40.8	49	56	66	76
EC		$40^{+0.039}_{0}$	$48^{+0.039}_{0}$	$55^{+0.046}_{0}$	$65^{+0.046}_{0}$	$75^{+0.046}_{0}$
ED		1	1	1	1	1.5
EE		49.5	52.5	62	65	71.5
JA		3.5			4.5	
JB		14			19	
Hydraulic Port：G Thread		G1/8			G1/4	
O-ring	DA	OR NBR-90 P5-N(1BP5)			OR NBR-90 P7-N(1BP7)	
	DB	3.8×1.5 (Inner Diam.× Wire Diam.)	AS568-031(70°)	AS568-034(70°)	AS568-037(70°)	AS568-040(70°)
	DC	AS568-028(70°)	AS568-031(70°)	AS568-033(70°)	AS568-036(70°)	AS568-039(70°)
Rcmd. Inner Diam. of Pipe ※9		ϕ6			ϕ8	

Note：※9. The recommended inner diameter of pipe is a reference value. Please change it depending on the number of clamps or the length of piping.

Link Lever Design Dimensions

※ Reference for designing link lever.

Corresponding Model No.

LJV [ ] **0 - C** [L/C/R] [E/H/J]

1 Body Size

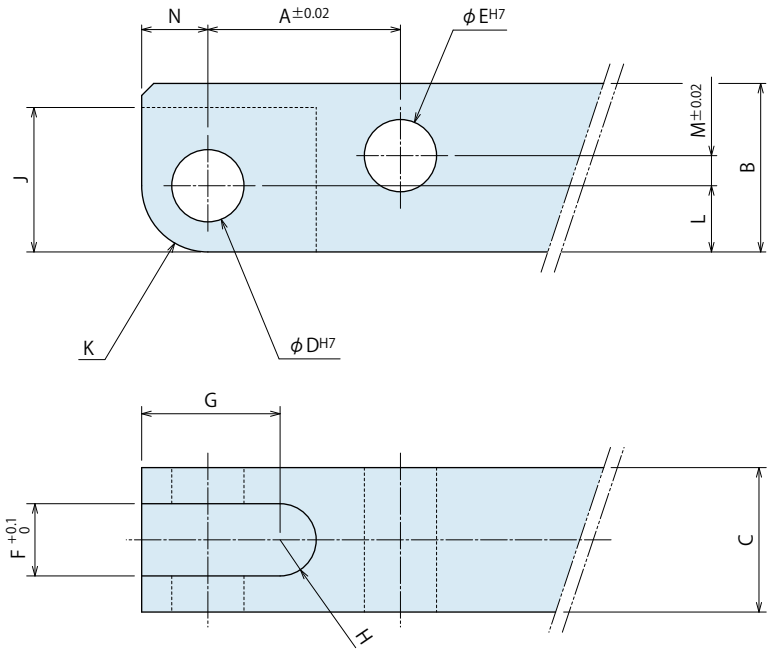

Link Lever Design Dimension List

(mm)

Corresponding Model No.	LJV0400	LJV0480	LJV0550	LJV0650	LJV0750
A	16	18.5	21	24.5	30
B	14	16	20	25	32
C	$12^{0}_{-0.3}$	$12^{0}_{-0.3}$	$16^{0}_{-0.3}$	$19^{0}_{-0.3}$	$22^{0}_{-0.3}$
D	$6^{+0.012}_{0}$	$6^{+0.012}_{0}$	$6^{+0.012}_{0}$	$8^{+0.015}_{0}$	$10^{+0.015}_{0}$
E	$6^{+0.012}_{0}$	$6^{+0.012}_{0}$	$8^{+0.015}_{0}$	$10^{+0.015}_{0}$	$12^{+0.018}_{0}$
F	6	6	8	10	11
G	11.5	13	12.5	16	20
H	R3	R3	R4	R5	R5.5
J	12	13	13	17.5	22
K	R5.5	R6	R6	R8	R10
L	5.5	6	6	8	10
M	2.5	3.5	6	7.5	9.5
N	5.5	6	6	8	10

Notes :

1. Please design the link lever length according to the performance curve.
2. If the link lever is not in accordance with the dimensions shown above, performance may be degraded and damage can occur.
3. Please use the attached pin (equivalent to φADf6, φAEf6, HRC60) as the mounting pin for lever.
   (Please refer to each external dimension of LJV for the dimensions φAD and φAE.)

Accessory：Link Lever (LZ-LJ1)

Model No. Indication

LZ 048 0 – LJ1

Size (Refer to the table.)

Design No. (Revision Number)

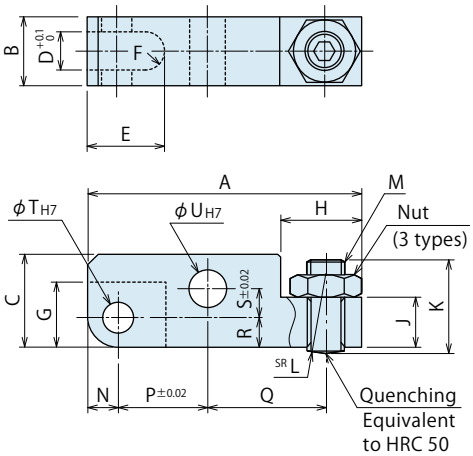

(mm)

Model No.	LZ0400-LJ1	LZ0480-LJ1	LZ0550-LJ1	LZ0650-LJ1	LZ0750-LJ1
Corresponding Model No.	LJV0400	LJV0480	LJV0550	LJV0650	LJV0750
A	48	54	64	74.5	88.5
B	$12^{0}_{-0.3}$	$12^{0}_{-0.3}$	$16^{0}_{-0.3}$	$19^{0}_{-0.3}$	$22^{0}_{-0.3}$
C	14	16	20	25	32
D	6	6	8	10	11
E	14.5	16	16.5	21	25.5
F	R3	R3	R4	R5	R5.5
G	12	13	13	17.5	22
H	13	13	17	22	25
J	7.5	8	10	13	16
K	16	18	22	27	31
L	10	10	15	20	30
M	M6×1	M6×1	M8×1.25	M10×1.5	M12×1.75
N	5.5	6	6	8	10
P	16	18.5	21	24.5	30
Q	20.5	23.5	29	32	37.5
R	5.5	6	6	8	10
S	2.5	3.5	6	7.5	9.5
T	$6^{+0.012}_{0}$	$6^{+0.012}_{0}$	$6^{+0.012}_{0}$	$8^{+0.015}_{0}$	$10^{+0.015}_{0}$
U	$6^{+0.012}_{0}$	$6^{+0.012}_{0}$	$8^{+0.015}_{0}$	$10^{+0.015}_{0}$	$12^{+0.018}_{0}$

Notes：
1. Material : S45C　Surface Finishing：Alkaline Blackening
2. If necessary, the front end should be additionally machined.
3. Please use the attached pin (equivalent to φADf6, φAEf6, HRC60) as the mounting pin for lever.

Accessory：Material Link Lever (LZ-LJ2)

Model No. Indication

LZ 048 0 – LJ2

Size (Refer to the table.)

Design No. (Revision Number)

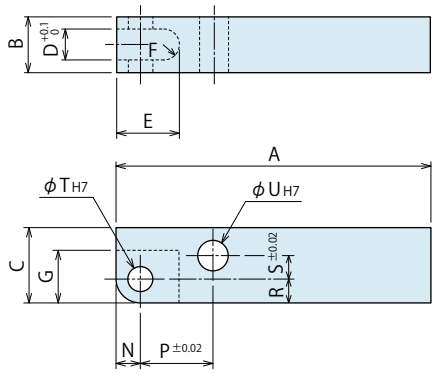

(mm)

Model No.	LZ0400-LJ2	LZ0480-LJ2	LZ0550-LJ2	LZ0650-LJ2	LZ0750-LJ2
Corresponding Model No.	LJV0400	LJV0480	LJV0550	LJV0650	LJV0750
A	75	85	90	105	110
B	$12^{0}_{-0.3}$	$12^{0}_{-0.3}$	$16^{0}_{-0.3}$	$19^{0}_{-0.3}$	$22^{0}_{-0.3}$
C	14	16	20	25	32
D	6	6	8	10	11
E	14.5	16	16.5	21	25.5
F	R3	R3	R4	R5	R5.5
G	12	13	13	17.5	22
N	5.5	6	6	8	10
P	16	18.5	21	24.5	30
R	5.5	6	6	8	10
S	2.5	3.5	6	7.5	9.5
T	$6^{+0.012}_{0}$	$6^{+0.012}_{0}$	$6^{+0.012}_{0}$	$8^{+0.015}_{0}$	$10^{+0.015}_{0}$
U	$6^{+0.012}_{0}$	$6^{+0.012}_{0}$	$8^{+0.015}_{0}$	$10^{+0.015}_{0}$	$12^{+0.018}_{0}$

Notes：
1. Material : S45C　Surface Finishing：Alkaline Blackening
2. If necessary, the front end should be additionally machined.
3. Please use the attached pin (equivalent to φADf6, φAEf6, HRC60) as the mounting pin for lever.

Cautions

Notes for Design

1) Check Specifications
- Please use each product according to the specifications.

2) Notes for Circuit Design
- Please read "Notes on Hydraulic Cylinder Speed Control Unit" for proper hydraulic circuit design. Improper circuit design may lead to malfunctions and damages. (Refer to P.40.)

3) Notes for Link Lever Design
- Make sure no force is applied to the piston rod except from the axial direction. The usage like the one shown in the drawing below will apply a large bending stress to the piston rod and must be avoided.

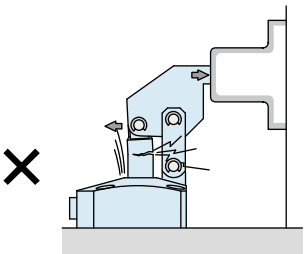

- If offset load is applied on the link part, use it within the allowable range of "Allowable Offset Graph".

4) Protect the exposed area of the piston rod when using on a welding fixture.
- If spatter attaches to the sliding surface it could lead to malfunction and fluid leakage.

5) When clamping on a sloped surface of the workpiece
- Make sure the clamping surface and the mounting surface of the clamp are parallel.

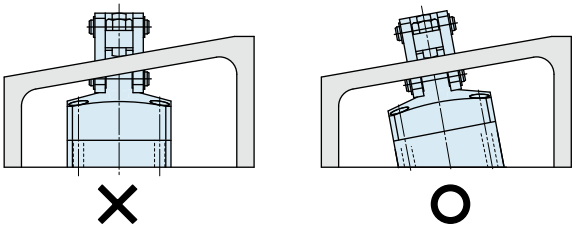

6) When using in a dry environment.
- The link pin can be dried out. Grease it periodically or use a special pin. Contact us for the specifications for special pins.

7) Vent Hole and Check Valve of Air Sensor
- Make sure to check the notes for design, installation and use on P. 23 when using an air sensor.

Installation Notes

1) Check the Usable Fluid

- Please use the appropriate fluid by referring to the Hydraulic Fluid List (P.39).

2) Installation of the Product

- When mounting the clamp, use hexagonal socket bolts as multiple bolt holes for mounting (with tensile strength of 12.9) and tighten them with the torque shown in the table below. Tightening with greater torque than recommended can dent the seating surface or break the bolt.

Model No.	Mounting Bolt Size	Tightening Torque (N·m)
LJV0400-C□□	M5×0.8	6.3
LJV0480-C□□	M5×0.8	6.3
LJV0550-C□□	M6×1	10
LJV0650-C□□	M6×1	10
LJV0750-C□□	M8×1.25	25

3) Installation / Removal of the Link Lever

- When inserting the link pin, do not hit the pin directly with a hammer. When using a hammer to insert the pin, always use a cover plate with a smaller diameter than the snap ring groove on the pin.

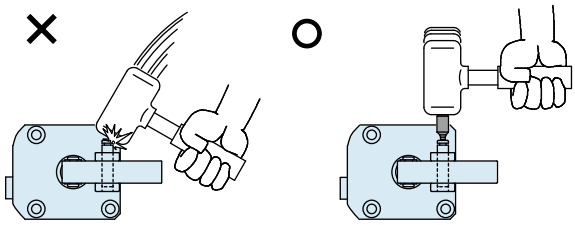

4) Speed Adjustment

- Adjust the speed so that the total operating time is one second or more. If the clamp operates too fast, the parts will be worn out, leading to premature damage and ultimately complete equipment failure.
- Please make sure to release air from the circuit before adjusting speed. It will be difficult to adjust the speed accurately with air mixed in the circuit.
- Turn the speed control valve gradually from the low-speed side (small flow) to the high-speed side (large flow) to adjust the speed.

※ Please refer to P.39 for common cautions.
・Installation Notes ・Hydraulic Fluid List ・Notes on Hydraulic Cylinder Speed Control Circuit
・Notes on Handling ・Maintenance/Inspection ・Warranty

Speed Control Valve (For Low Pressure)

Directly Mounted to Clamps

Speed Control Valve (model BZL) attaches directly to KOSMEK hydraulic clamp with piping method: type C.

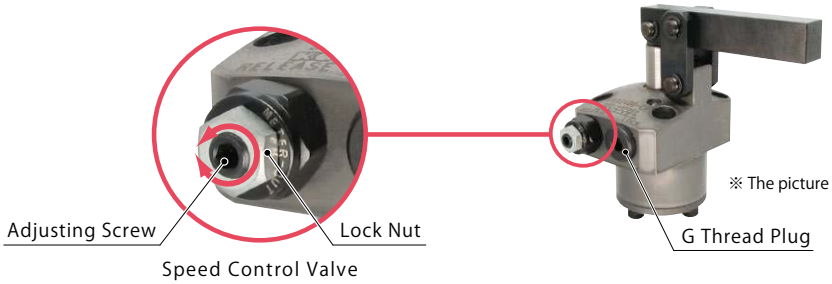

※ The picture shows a double-acting clamp (model LKA).

Action Description

Control the flow with a wrench.
Able to change the clamping action speed individually.

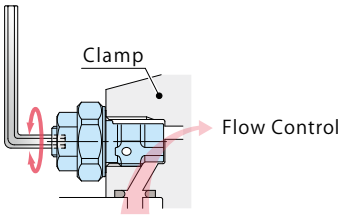

Able to release the air in the circuit by loosening the Speed Control Valve.

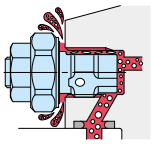

Model No. Indication (Speed Control Valve for Low Pressure)

BZL 0 10 1 - A

1 2 3

1 G Thread Size

10 : Thread Part G1/8A Thread

20 : Thread Part G1/4A Thread

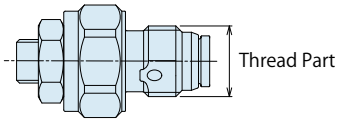

2 Design No.

1 : Revision Number

3 Control Method

A : Meter-in

A

Circuit Symbol : Meter-in

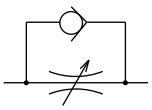

Specifications

Model No.		BZL0101-A	BZL0201-A
Max. Operating Pressure	MPa	7	
Withstanding Pressure	MPa	10.5	
Control Method		Meter-in	
G Thread Size		G1/8A	G1/4A
Cracking Pressure	MPa	0.04	
Max. Passage Area	mm^2	2.6	5.0
Usable Fluid		General Hyd. Oil Equivalent to ISO-VG-32	
Operating Temperature	℃	0 ~ 70	
Tightening Torque for Main Body	N·m	10	25
Weight	g	12	26

Notes :

1. It must be mounted with recommended torque. Because of the structure of the metal seal, if mounting torque is insufficient, it may not be able to control the flow rate.
2. Do not attach a used BZL to other clamps. Flow control may not be succeeded because the bottom depth difference of G thread makes metal sealing insufficient.

Applicable Products

Model No.	LGV (Single Action) Swing Clamp	LJV (Single Action) Link Clamp
BZL0101-A	LGV0400-C□□ LGV0480-C□□ LGV0550-C□□	LJV0400-C□□ LJV0480-C□□ LJV0550-C□□
BZL0201-A	LGV0650-C□□ LGV0750-C□□	LJV0650-C□□ LJV0750-C□□

Flow Rate Graph ＜Hydraulic Fluids ISO-VG32 (25 ~ 35°)＞

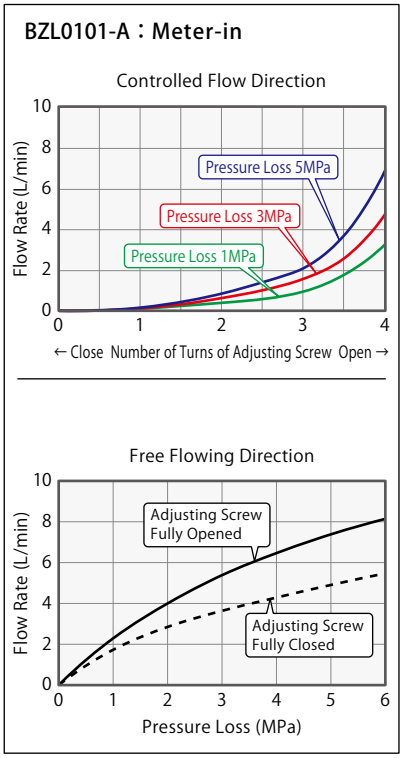

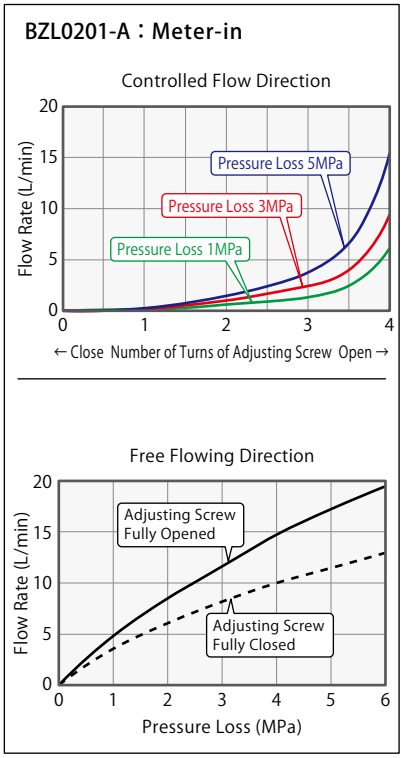

External Dimensions

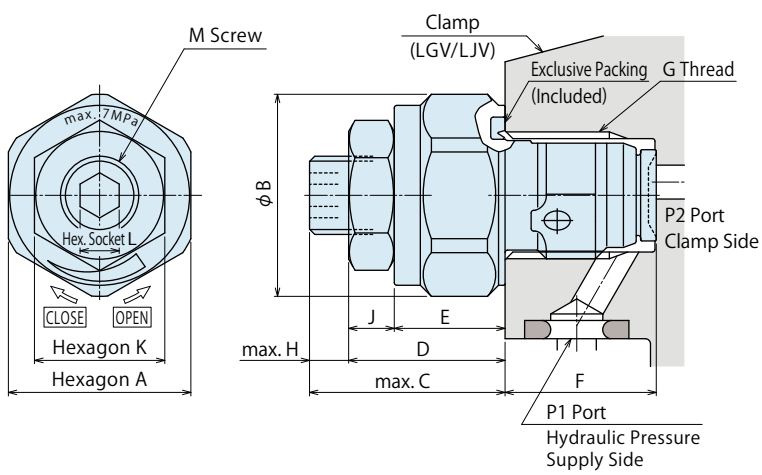

(mm)

Model No.	BZL0101-A	BZL0201-A
A	14	18
B	15.5	20
C	15	16
D	12	13
E	8.5	9.5
F	(11.6)	(15.1)
G	G1/8	G1/4
H	3	3
J	3.5	3.5
K	10	10
L	3	3
M (Nominal × Pitch)	M6×0.75	M6×0.75

Notes

1. Please read "Notes on Hydraulic Cylinder Speed Control Unit" for proper hydraulic circuit design.
   Improper circuit design may lead to malfunctions and damages. (Refer to P.40)
2. It is dangerous to release the air under high pressure. It must be done under lower pressure.
   (For reference : the minimum operating range of the product within the circuit.)

Cautions

Installation Notes (for Hydraulic Series)

1) Check the Usable Fluid

- Please use the appropriate fluid by referring to the Hydraulic Fluid List.

2) Procedure before Piping

- The pipeline, piping connector and fixture circuits should be cleaned by thorough flushing.
- The dust and cutting chips in the circuit may lead to fluid leakage and malfunction.
- There is no filter provided with Kosmek's product except for a part of valves which prevent contamination in the circuit.

3) Applying Sealing Tape

- Wrap with tape 1 to 2 times following the screw direction.
- Pieces of the sealing tape can lead to oil leakage and malfunction.
- Please implement piping construction in a clear environment to prevent anything getting in products.

4) Air Bleeding of the Hydraulic Circuit

- If the hydraulic circuit has excessive air, the action time may become very long. If air enters the circuit after connecting the hydraulic port or under the condition of no air in the oil tank, please perform the following steps.

① Reduce hydraulic pressure to less than 2MPa.
② Loosen the cap nut of pipe fitting closest to the clamp, cylinder, work support, etc. by one full turn.
③ Shake the pipeline to loosen the outlet of pipe fitting. Hydraulic fluid mixed with air comes out.

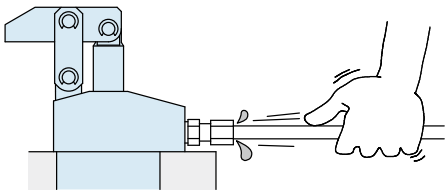

④ Tighten the cap nut after air bleeding.
⑤ It is more effective to release air at the highest point inside the circuit or at the end of the circuit. (For the gasket option, set an air bleeding valve at the highest point inside the circuit.)

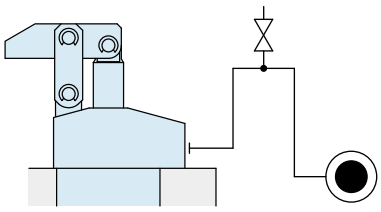

5) Checking Looseness and Retightening

- At the beginning of the product installation, the bolt and nut may be tightened lightly.
  Check the looseness and re-tighten as required.

Hydraulic Fluid List

ISO Viscosity Grade ISO-VG-32

Manufacturer	Anti-Wear Hydraulic Oil	Multi-Purpose Hydraulic Oil
Showa Shell Sekiyu	Tellus S2 M 32	Morlina S2 B 32
Idemitsu Kosan	Daphne Hydraulic Fluid 32	Daphne Super Multi Oil 32
JX Nippon Oil & Energy	Super Hyrando 32	Super Mulpus DX 32
Cosmo Oil	Cosmo Hydro AW32	Cosmo New Mighty Super 32
ExxonMobil	Mobil DTE 24	Mobil DTE 24 Light
Matsumura Oil	Hydol AW-32	
Castrol	Hyspin AWS 32	

Note : Please contact manufacturers when customers require products in the list above.

Notes on Hydraulic Cylinder Speed Control Unit

Please pay attention to the cautions below. Design the hydraulic circuit for controlling the action speed of hydraulic cylinder. Improper circuit design may lead to malfunctions and damages. Please review the circuit design in advance.

Flow Control Circuit for Single Acting Cylinder

For spring return single acting cylinders, restricting flow during release can extremely slow down or disrupt release action. The preferred method is to control the flow during the lock action only using a flow control valve with a check valve.
It is also preferred to provide a flow control valve at each actuator.

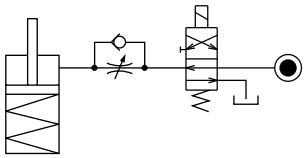

If a load is applied in the direction of release action during release, which may damage the cylinder, use a flow control valve with a check valve to control the flow rate on the release side as well. (This also applies to swing clamps where the lever weight is applied during release.)

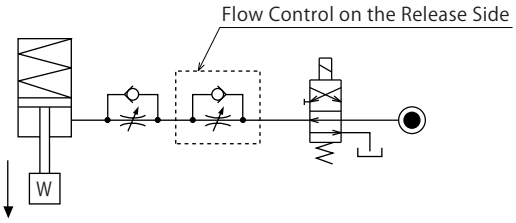

Single acting cylinders should not be used in the same flow control circuit as the double acting cylinders.
The release action of the single acting cylinders may become erratic or very slow.

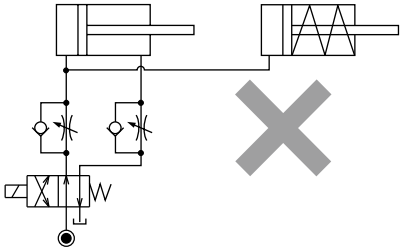

Refer to the following circuit when both the single acting cylinder and double acting cylinder are used together.
○ Separate the control circuit.

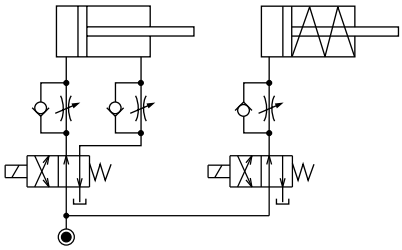

○ Reduce the influence of double acting cylinder control unit.
However, due to the back pressure in tank line, single acting cylinder is activated after double acting cylinder works.

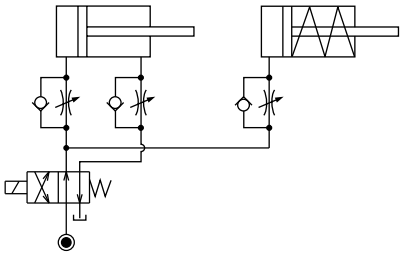

Cautions

Notes on Handling

1) It should be operated by qualified personnel.
- The hydraulic machine and air compressor should be operated and maintained by qualified personnel.

2) Do not operate or remove the product unless the safety protocols are ensured.
① The machine and equipment can only be inspected or prepared when it is confirmed that the safety devices are in place.
② Before the product is removed, make sure that the above-mentioned safety devices are in place. Shut off the pressure and power source, and make sure no pressure exists in the air and hydraulic circuits.
③ After stopping the product, do not remove until the temperature drops.
④ Make sure there is no abnormality in the bolts and respective parts before restarting the machine or equipment.

3) Do not touch the clamp (cylinder) while it is working. Otherwise, your hands may be injured due to clinching.

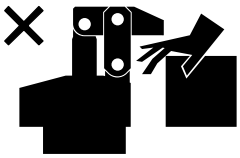

4) Do not disassemble or modify.
- If the equipment is taken apart or modified, the warranty will be voided even within the warranty period.

Maintenance and Inspection

1) Removal of the Product and Shut-off of Pressure Source
- Before the product is removed, make sure that safety devices and preventive devices are in place. Shut off the pressure and power source, and make sure no pressure exists in the air and hydraulic circuits.
- Make sure there is no abnormality in the bolts and respective parts before restarting.

2) Regularly clean the area around the piston rod.
- If it is used when the surface is contaminated with dirt, it may lead to packing seal damage, malfunctioning and fluid leakage.

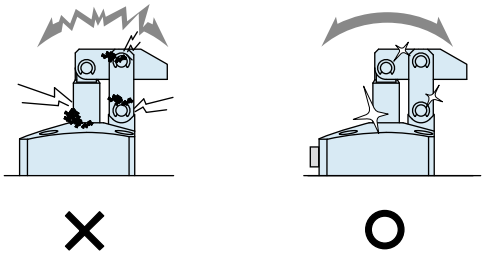

3) If disconnecting by couplers, air bleeding should be carried out on a regular basis to avoid air mixed in the circuit.

4) Regularly tighten pipe, mounting bolt, nut, snap ring, cylinder and others to ensure proper use.

5) Make sure the hydraulic fluid has not deteriorated.

6) Make sure there is a smooth action without an irregular noise.
- Especially when it is restarted after left unused for a long period, make sure it can be operated correctly.

7) The products should be stored in the cool and dark place without direct sunshine or moisture.

8) Please contact us for overhaul and repair.

Warranty

1) Warranty Period

- The product warranty period is 18 months from shipment from our factory or 12 months from initial use, whichever is earlier.

2) Warranty Scope

- If the product is damaged or malfunctions during the warranty period due to faulty design, materials or workmanship, we will replace or repair the defective part at our expense.
  Defects or failures caused by the following are not covered.

① If the stipulated maintenance and inspection are not carried out.
② If the product is used while it is not suitable for use based on the operator's judgment, resulting in defect.
③ If it is used or operated in an inappropriate way by the operator. (Including damage caused by the misconduct of the third party.)
④ If the defect is caused by reasons other than our responsibility.
⑤ If repair or modifications are carried out by anyone other than Kosmek, or without our approval and confirmation, it will void warranty.
⑥ Others caused by natural disasters or calamities not attributable to our company.
⑦ Parts or replacement expenses due to parts consumption and deterioration.
(Such as rubber, plastic, seal material and some electric components.)

Damages excluding from direct result of a product defect shall be excluded from the warranty.

KOSMEK
Harmony in Innovation

KOSMEK LTD.

http://www.kosmek.com/

HEAD OFFICE 1-5, 2-chome, Murotani, Nishi-ku, Kobe-city, Hyogo, Japan 651-2241
TEL.+81-78-991-5162 FAX.+81-78-991-8787

United States of America SUBSIDIARY	KOSMEK (USA) LTD. 650 Springer Drive, Lombard, IL 60148 USA TEL. +1-630-620-7650 FAX. +1-630-620-9015
MEXICO REPRESENTATIVE OFFICE	KOSMEK USA Mexico Office Av. Santa Fe 103, Int. 59, col. Santa Fe Juriquilla, Queretaro, QRO, 76230, Mexico TEL. +52-1-55-3044-9983
EUROPE SUBSIDIARY	KOSMEK EUROPE GmbH Schleppeplatz 2 9020 Klagenfurt am Wörthersee Austria TEL. +43-463-287587 FAX. +43-463-287587-20
CHINA SUBSIDIARY	KOSMEK (CHINA) LTD. Room601, RIVERSIDE PYRAMID No.55, Lane21, Pusan Rd, Pudong Shanghai 200125, China TEL. +86-21-54253000
INDIA BRANCH OFFICE	KOSMEK LTD. - INDIA 4A/Old No:649, Ground Floor, 4th D cross, MM Layout, Kavalbyrasandra, RT Nagar, Bangalore -560032 India TEL.+91-9880561695
THAILAND REPRESENTATIVE OFFICE	KOSMEK Thailand Representation Office 67 Soi 58, RAMA 9 Rd., Phatthanakan, Suanluang, Bangkok 10250, Thailand TEL. +66-2-300-5132 FAX. +66-2-300-5133

- For Further Information on Unlisted Specifications and Sizes, Please call us.
- Specifications in this Leaflet are Subject to Change without Notice.

ISO 9001
JQA-QMA10823
KOSMEK HEAD OFFICE

JAB MS CM009

CAT.NO. SBR-LGV001-02-G1B
Printed in Japan

2021/10 First 1Ry