OPERATION AND MAINTENANCE MANUAL

■ SKP-BC40HL (VER:3.0)
■ SKP-BC40HL-800 (VER:3.0)
■ SKP-BC32HL-100 (VER:3.0)

KILEWS INDUSTRIAL CO., LTD.

http://www.KILEWS.com

Y2F125-E-001

NOTICE

Metal Assembly Screwdrivers are designed for installing threaded fasteners in light industrial and appliance manufacturing applications.
KILEWS is not responsible for customer modification of tools for applications on which KILEWS was not consulted.

WARNING

Important safety information enclosed.
Read all these instructions before placing tool in service or operation this tool and save these instructions. It is the responsibility of the employer to place the information in this manual into the hands of the operator. Failure to observe the following warnings could result in injury. When using electric tools, Basic safety precautions should always be followed to reduce the risk of fire, electric shock and personal injury, including the following：

1.General Safety Rules …… 1
2.Important Safety Instructions …… 2
3.Operations Cautions …… 4
4.Main Technical parameters …… 5
Controlpanel specifications …… 6
Functions of Keys on Pane l…… 7
I/O Inserting Hole …… 9
Functional Dip Switch …… 11
5.System Setting …… 14
6.Simulated Learning …… 17
7.Grounding …… 17
8.Servicing …… 17
9.Explosive Drawing for Parts /Spare- Part List …… 19

Important Safety Instructions

WARNING! Read all instructions Failure to follow all instructions listed below may result in electric shock fire and/or serious injure. The term "power tool" in all of the warning listed below refer to your mains operated (corded) power tool or battery operated (cordless) power tool.

SAVE THESE INSTRUCTIONS

1) Electrical Safety

a) **Keep work area clean and well lit.** Cluttered and dark areas invite accidents.

b) **Do not operate power tools in explosive atmosphere, such as in the presence of flammable liquids, gases or dust.** Power tools create sparks which may ignite the dust of fumes.

c**) Keep children and bystanders away while operating a power tool.**
Distractions can cause you to lose control.

2) Electrical Safety

a) **Power tool plugs must match the outlet. Never modify the plug in any way. Do not use any adapter plugs with earthed (grounded) power tools**.
Unmodified plugs and matching outlets will reduce risk of electric shock.

b) **Avoid body contact with earthed or grounded surfaces such as pipes, radiators, ranges and refrigerators.** There is an increased risk of electric shock if your body is earthed or grounded.

c) **Don't expose power tools to rain or wet conditions.**
Water entering a power tool will increase the risk of electric shock.

d) **Do not abuse the cord. Never use the cord to carrying, pulling or unplugging the power tool. Keep cord away from heat, oil, sharp edges or moving parts.**
Damaged or entangled cords increase the risk of electric shock.

e) **When operating a power tool outdoors, use an extension cord suitable for outdoor use.**
Use of cord suitable for outdoor use reduces the risk of electric shock.

3) Personal Safety

a) **Stay alert, watch what you are doing and use common sense when operating a power tool. Do not use power tool while you are tired or under the influence of drugs, alcohol, or medication.** A moment of inattention while operating power tools may result in serious personal injury.

b) **Use safety equipment. Always wear eye protection.** Safety equipment such as dust mask, non-skid safety shoes, hard hat, or hearing protection used for appropriate conditions will reduce personal injuries.

c) **Avoid accidental starting. Ensure the switch is in the off position before plugging in.** Carrying power tools with your finger on the switch or plugging in power tools that have the switch on invites accidents.

d) **Remove any adjusting keys or wrench before turning the power tool on.** A wrench or a key that is left attached to a rotating part of the power tool may result in personal injury.

e) **Do not overreach. Keep proper footing and balance at all times.**
This enables better control of the power tool in unexpected situations.

f) **Dress properly. Do not wear loose clothing or jewellery. Keep your hair, clothing, and gloves away from moving parts.** Loose clothes, jewellery, or long hair can be caught in moving parts

g) **If devices are provided for the connection of dust extraction and collection facilities, ensure these are connected and properly used.** Use of these devices can reduce dust related hazards.

4) Power tool Use and Care

a) **Do not force the power tool. Use the correct power tool for your application.**
The correct power tool will do the job better and safer at the rate for which it was designed.

b) **Do not use power tool if switch does not turn it on or off.** Any power tool that cannot be controlled with the switch is dangerous and must be repaired.

c) **Disconnect the plug from the power source before making any adjustments, changing accessories, or storing the power tools.**
Such preventive safety measures reduce the risk of starting the power tool accidentally.

d) **Store idle power tools out of reach of children and do not allow persons unfamiliar with the power tool or these instructions to operate the power tool.**
Power tools are dangerous in the hands of untrained users.

e) **Maintain power tools. Check for misalignment or binding of moving parts, breakage of parts and any other condition that may affect the power tools operation. If damaged, have the power tool repaired before use.** Many accidents are cause by poorly maintained power tools.

f) **Keep cutting tools sharp and clean**, properly maintained cutting tools with sharp cutting edges are less likely to bind and are easier to control.

g) **Use the power tools, accessories and tool bits etc., in accordance with these instructions and in the manner intended for the particular type of power tool, taking into account the working conditions and the work to be performed.**
Use of the power tool for operations different from intended could result in a hazardous situation.

5) SERVICE

a) **Have your power tool serviced by qualified repair person using only identical replacement parts**,
This will ensure that the safety of the power tool is maintained.

Additional information shall be provide

a) Instruction for putting into use
1. Setting-up or fixing power tool in a stable position as appropriate for power tools which can be mounted on a support.
2. Assembly
3. Connection to power supply, cabling, fusing, socket type and earthing requirements.
4. Illustrated description of functions.
5. Limitations on ambient conditions.
6. List of contents.

b) Operating Instructions.
1. Setting and testing.
2. Tool changing.
3. Clamping of work.
4. Limits on size of work piece.
5. General instructions for use.

c) Maintenance and servicing.
1. Regular cleaning, maintenance, and lubrication.
2. Servicing by manufacture or agent, list of addresses.
3. List of user-replaceable parts.
4. Special tools which may be required.

Operations Cautions

1. Please read the operating manual thoroughly and comply with safety regulation to operate this Multi-Function Controller.
2. Please grasp the plug of power cord while plugging in or out the plugs of connecting cord of Electric Screwdriver and power cord.
3. Please fix the power controller to avoid any danger of pulling and dragging the power cord.
4. Do not near oil, chemical materials or heated objects, also please be alert not to scratch the power cord by sharp object.
5. This type of Controller can only be applied to KILEWS Electric Screwdriver with Counter. Do not use Electric Screwdriver Controller on other types of machinery.
6. In case of the Controller is overheated or overloaded with maximum current rating of fuse, the high-speed fuse will be melt down and cut off the power. If the Controller continues to jump off or has an abnormal switching reaction, please stop the operation immediately and send back the Controller for repair.
7. When Electric Screwdriver is running, if slides Forward/Reverse Switch instantly, device will generate the protection program to force Electric Screwdriver stop.
8. Please do not disassemble Electric Screwdriver casually and try to repair it by self.
9. When Controller is not in use, please turn the main power switch OFF and unplug the power.
10. The electric frequency will be lower when the voltage is adjusted as Lo or below 32V, so the torque of the electric screwdrivers can't be worked out except below scale of 4.

CAUTION

∗ Please arrange to use the whole set of Electric Screwdriver SKD-BN series except SKD-BN series with the Multi-Function Controller.

∗ Please arrange to use together with KILEWS SKD-BN series Electric Screwdriver. If operator uses different brand of Electric Screwdriver and repair tools with parts or accessories not from KILEWS manufacturer, it may cause the Controller malfunction or poor quality. As a result, all of product guarantees will be void and no obligation to the manufacturer.

∗ When Electric Screwdriver is running, if operator slide Forward/Reverse switch instantly, device will turn on the protection program to force the Electric Screwdriver stop running.

∗ Don't swtich HI/LO changeover button when the screwdriver is running.

∗ To plug or unplug the DC connector must wait the LED OFF after power off.

Main Technical parameters

Model No	SKP-BC32HL-100 (ver：3.0)	SKP-BC40HL (ver：3.0)	SKP-BC40HL-800 (ver：3.0)
Input Voltage	AC 100-240V 50 / 60Hz	AC 100-240V 50 / 60Hz	AC 115/230V 50 / 60Hz
Output Voltage	DC 32V/ 24V	DC 40V/ 32V/ 24V	DC 40V/ 32V/ 24V
Power Consumption	60W	220W	360W
Counting Numbers	1~99		
Counting Method	Forward as / Count down		
Connecting Sensor	ON / OFF		
Sensing Switch Mode	ON (2 Sensor) / OFF (1 Sensor)		
Slow-Start Time Adj.	0.0~9.9 seconds		
Slow-Start Speed Adj.	L0：100%， 30%~90% L1~L9 Rated speed		
Start Detecting Time	0.01-9.99 seconds		
Stop Detecting Time	0.1-9.9 seconds		
Detecting Alarm	ON/ OFF/ FF/ EF with LED and buzzer		
Auto response/Manual response	ON / OFF		
External Connection Input	Forward / Reversion / Prohibit operation / Sensor Switch / resuming Switch / Confirm Switch		
External Connection Output	OK/ NG/ OK ALL		
Electric Screwdriver Speed Control	HI / LO； Slow Start		
Size (mm)	200*130*100	247 *130*100	
Weight (Kg)	1.53	2.4	
Applicable Electric Screwdrivers	SKD-BN203L；SKD-BN203LS5；SKD-BN203LS6；SKD-BN203LS7 SKD-BN207L；SKD-BN210L		
	SKD-BN512L；SKD-BN512P；SKD-BN512LF；SKD-BN512PF SKD-BN519L；SKD-BN519P；SKD-BN517LF；SKD-BN517PF		
	SKD-BN730L；SKD-BN730P；SKD-BN722LF；SKD-BN722PF		
		SKD-BN830L；SKD-BN830P；SKD-BN830LF；SKD-BN830PF SKD-BN850L；SKD-BN850P	
		SKD-TBN60L；SKD-TBN90L；SKD-TBN120L；SKD-TBN180L	
		SKD-RBN60L；SKD-RBN60P；SKD-RBN90L；SKD-RBN90P SKD-RBN120L；SKD-RBN120P；SKD-RBN180L； SKD-RBN180P	
			SKD-BN960L；SKD-BN960P SKD-BN990L；SKD-BN990P SKD-BN9120L；SKD-BN9120P SKD-BN960LF；SKD-BN960PF SKD-RBN250L；SKD-RBN250P
Accessories	Power cord *1、Key *2		

※SKD-BN203LS5 can't work with slow start (RC / SP) function.

※SKP-BC series must be used with SIX PIN screwdrivers, so please confirm the screwdriver's type is SKD-BN series and the connector is SIX PIN when using.

Step of the screwdriver confirmation：

1.Confirm the sticker is "SKD-BN"

type.

2.Confirm the screwdriver's CONNECTOR type is SIX PIN.

3.Confirm the connect cable between screwdriver and power controller is SIX wires.

Control panel specifications

NO.	PARTS NAME	NO.	PARTS NAME
1	LED Indicator	12	Down-Selecting Key
2	HI / LO Speed Switch	13	System Build-in Reset Key
3	Key setting lock	14	POWER/CLEAR Key
4	6Pin Connector	15	Functional Selection / Confirm Key
5	WORK Light	16	Power point
6	OK Light	17	POWER SWITCH
7	N.G Light	18	Output voltage choice
8	24V Light	19	I/O Inserting Hole ∗ Instruction
9	32V Light	20	Functional Dip Switch ∗ Instruction
10	40V Light	21	GND
11	Up-Selecting Key		

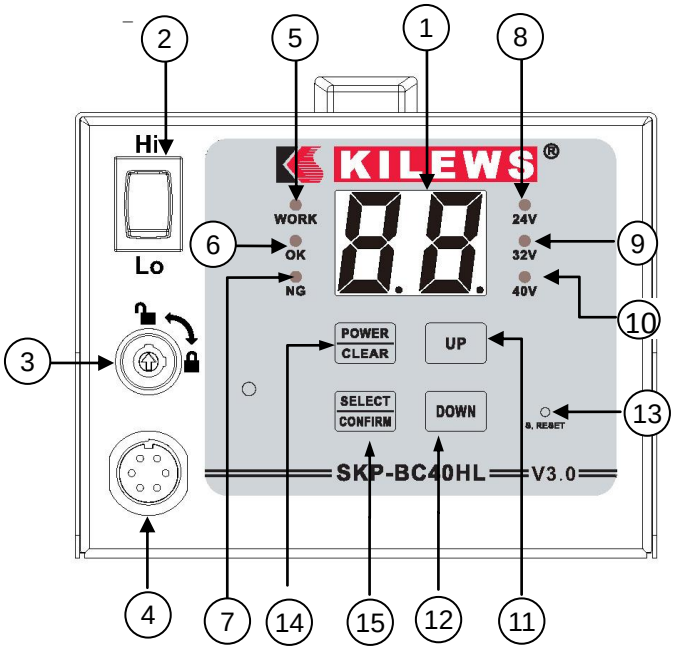

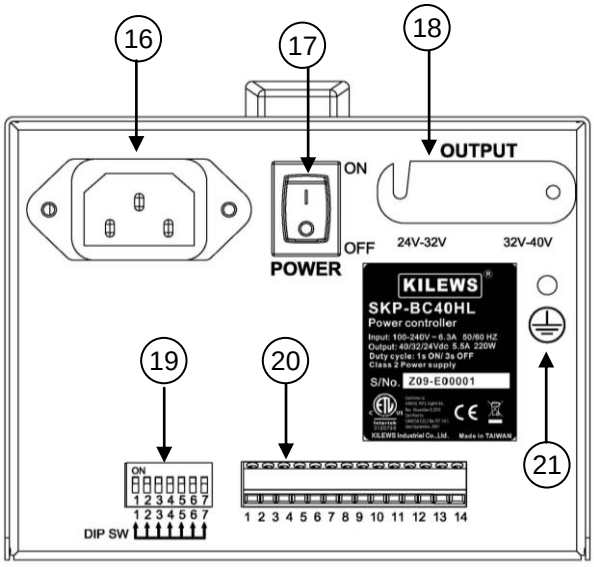

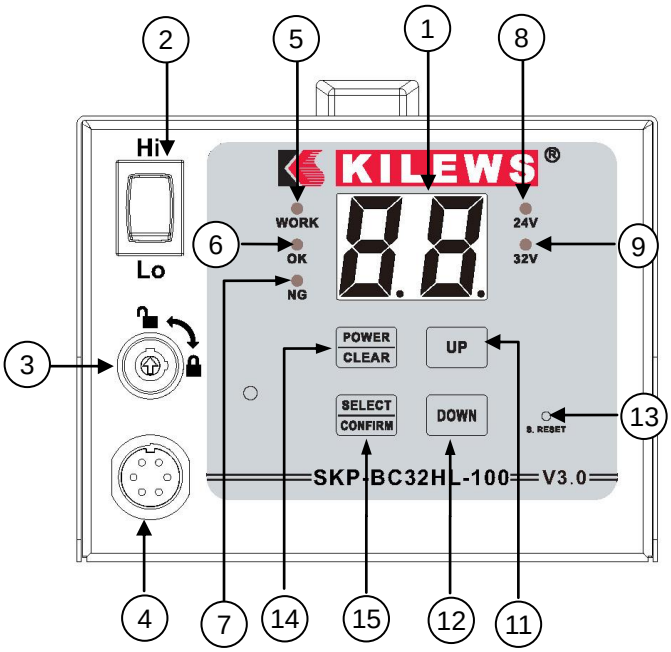

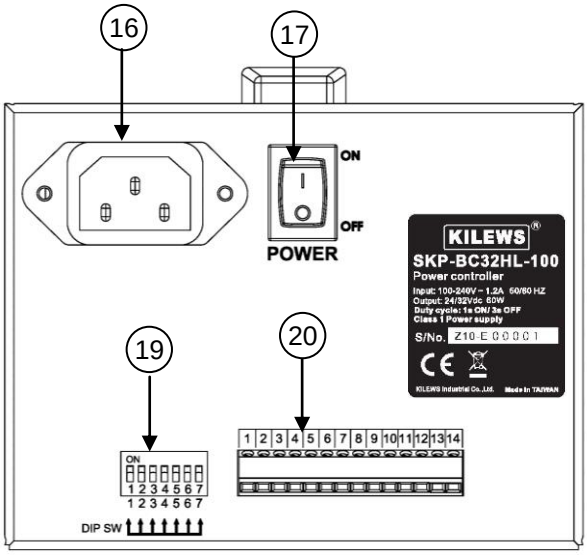

Functions of Keys on Panel：

Key	Description of function.	Remarks
POWER CLEAR	POWER： **Power Switch** (1) When power on and have not start counting operation: Hold for 6 seconds：turn off counting function. When turn off the counting function, the LED screen is off. (2) When power on and the counting function is off： Hold for 3 seconds to turn back on the counting function. CLEAR： **Clear Switch** (1) when screwdriver start counting function Hold for 1 second：CLEAR, return to original setting for the number of screws and Beep once Hold for 3 seconds：Back to U1 (under screw list loop.) and beep 2 times Switch page：Under setting menu will change pages of decimal point	When there is NG signal, press CLEAR bottom to clear the NG signal
SELECT CONFIRM	SELECT： Press and hold SELECT button for 3 seconds to enter system setting menu： SL---SC---At---RC---SP---Ht---Lt---LL---NS---rt---rr---rS When enter the setting menu. Press and hold S button to show the function (ex：SL or SC…etc.)and with beep sound. Release the "S" button to show the setting value CONFIRM： When DIP SW3 ON, when the user finished fasten a unit of screws. The counter requires to press CONFIRM button to start the next unit	1. Refer to CONFIRM mode： When there is NG signal output. Press "CONFIRM" button to stop the NG signal output.
UP	UP： In system menu, pressing the key to increase the number. This key will point out user set-up number and unit during the process ： U1： No.1 setting number. U2： No.2 setting number. U3： No.3 setting number. U4： No.4 setting number. U5： No.5 setting number.	When press the UP button (hold), then panel will show the unit number, then press the start plate and the screwdriver will not operate
DOWN	DOWN： In system menu, pressing the key to decrease the number. This key will point out user set-up number and group during the process ： U1： No.1 setting number. U2： No.2 setting number. U3： No.3 setting number. U4： No.4 setting number. U5： No.5 setting number.	When press the DOWN button (hold), then panel will show the unit number, then press the start plate and the screwdriver will not operate
UP + DOWN	Up+Down： Select the following modes. On: When fastening screw, completing work and if mistaken operation, the buzzer sound will be on. FF: warring beep when finish all screws in the list and error in operation OF: Only beep warning when wrong operation EF: As one screw is fastened and work is completed, buzzer will be on；wrong operation will be no sound.	
S. RESET	S.RESET：**SYSTEM RESET** Because of voltage or operation cause system abnormal, push this key back to the initial number.	Press RESET key once then release. When hold RESET key, the screwdriver is not able to operate until the release the reset button.

UP + SELECT CONFIRM	LC | POWER CLEAR | SELECT CONFIRM | S. RESET | Lock function of the Panel Lock Un | POWER CLEAR | SELECT CONFIRM | S. RESET | Unlock function of the Panel Lock	
UP + POWER CLEAR	Enter the setup： dt ----- tt ----- Sr ---- SA dt/tt dt：the time range between each screwing process. This function will be triggered after finish one screwing process. If user doesn't start next screwing process in this setting time range. The system will display "dt" until next screwing process is started. ("01"= 1 second) tt：All the screwing processes in this list need to be finished under this setting time range. If user didn't finish all the screws in this setting time range, the panel will display "tt" until all the screwing processes are finished. ("01"= 1 minute) Note： (1) When dt errors, restart the screwdriver will release from error status. If two or more error occurs, the red light up and buzzer sounds, LED screen will display other error messages (eg：NS)；To solve another errors first and the red light will turn off , but dt continued errors. (2) When tt error occurs, to completed all fastening process will released from tt error condition .If an error occurs while there are other error coexist , same as dt situation . (3) When multiple loop mode： dt is for every one small loop (U #, #：1,2,3,4,5) , for each fastening screw time interval. tt is for the time of one big loop (U1 ~ U #, #：2,3,4,5) , which is from U1 first start until the end of last U # screw is fastened (4) When the dt / tt occurs, press CLEAR to release from dt / tt , counter will return to the original screw numbers setting of the current unit Sr：Multiple function switch cycle SENSOR Y：multiple cycles (SW2 = ON, SW6 = ON), when the number of fasten screws U1 are complete then screwdriver stop until the sensor triggered (SW4 = OFF). If SW4 = ON, you need to trigger twice before jumping to U2 ... and so on N：multiple cycles (SW2 = ON, SW6 = ON or SW2 = ON, SW4 = ON, SW6 = ON), when the number of fasten screw U1 are finish will automatically execute At time of that unit, then automatically start unit 2. Sr default：N Note：When SW6 = ON, Sr parameter setting (Y / N) only for reference. That is, Sr is a global variable, once SW6 = ON；Sr can set Y or N , then U2 ~ U5 SENSOR mode will follow same setting SA：When under Sensor mode, SA parameter setting only effect when the SW2 = ON, SW4 = OFF. The up and down button in the front panel can switch value (HI / LO). HI：Hi Active LO：Lo Active The default value is：HI	Note： (1) When the user press the POWER + UP, panel display dt, release POWER + UP to display values under dt mode, press "S" can go in setting "tt", press "S" can go in setting "Sr" and then press "S" can set "SA". (2) dt / tt cannot coexist, which mean are not able to set up at the same time. When set value dt> 0；tt will not show (cannot set value). Similarly, when the tt> 0, the dt setup value selection will not show.
	S. RESET Unlock Function	
	HL | S. RESET | Lock Function 1.Lock with the key (Need use the key to lock 2.When KEY lock is in lock position, the user change the Hi/Lo speed setting, the LED will display "PC" and the counter will beep 8 times until user change back the Hi/Lo setting.	

I/O Inserting Hole：

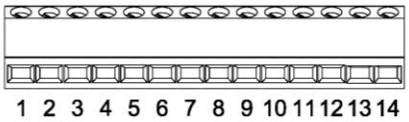

No	Name	In/Out	Content	wave pattern of signals	Remark
CN1	V+		Output 12 or 24 v dc		Output：DC +12V or +24V (Max：200mA) Default value：+24VDC (+12VDC need to custom modify)
CN2~CN3	OK	Output	CN2 and CN3 will be short when finished fasten one screw	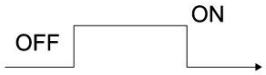	Automatically open MOS RELAY (default) +/- 40V, +/- 250mA (Open Collector need to custom modify)
CN4~CN5	NG	Output	CN4 and CN5 will be short when error occur		Automatically open MOS RELAY (default) +/- 40V, +/- 250mA (Open Collector need to custom modify)
CN6~CN7	OK ALL	Output	CN6 and CN7 will be short when finished fasten all screw in the list	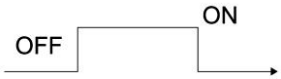	Automatically open MOS RELAY (default) +/- 40V, +/- 250mA (Open Collector need to custom modify)
CN8	START_IN	Input	External START input	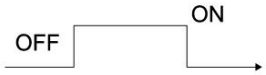	1.When short Start input and COM(CN14) (CLOSE circle), able to start the screwdriver 2.When open circle with COM(CN14), screwdriver stop.
CN9	DIR_IN	Input	External REVERSE input	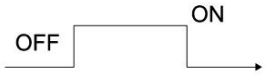	Shorten with COM (Close circle) and when enable start signal (CN8 + COM), screwdriver will start with Reverse rotation. If the driver switches F/R switch on "forward", when CN9 + COM short screwdriver is still reversed rotation after start
CN10	DISABLE	Input	External DISABLE input	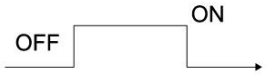	When short with COM (CLOSE circle), cannot start the screwdriver When open circle with COM, screwdriver is able to start * When DISABLE (shorted with COM), work LED lights ON for 5 seconds, then OFF, then light up again for 5 seconds, on and off in circle.
CN11	CONFIRM	Input	External CONFIRM input	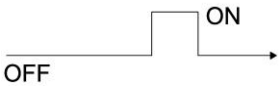	This switch feature and function is the same as CONFIRM, but no SELECT key function After press CONFIRM the NG signal will be release.
CN12	GATE	Input	External sensor switch	SW2:ON SW4：OFF 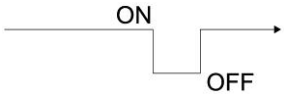 SW2：ON SW4：ON 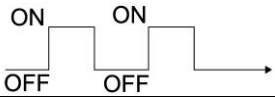	Input a confirm signal for machine to start working. Sensor Switch：External device, you can connect one or two switches.
CN13	CLR	Input	External device CLEAR switch	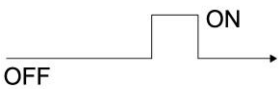	External clear switch, same as clear button on the panel. It also can disable N.G signal when it is triggered
CN14	COM		—		CN8 ~ CN13output/input signal COM port

※CN1(V+) and CN14(COM) can provide DC 24V**(Default)**。**(DC +12V need to custom modify)**

※If users need different DC voltage, they must use their own step-down circuit to decrease voltage.

※If user need to input voltage to drive the alert instrument, do not use over DC+/-40V /, +/- 250mA voltage.

Terminal Connecting Diagram：(To take factory default：**MOS RELAY I/O** for example)

Output：

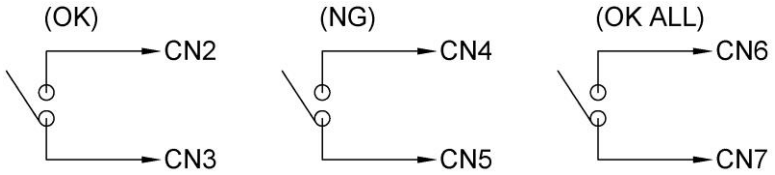

Input：

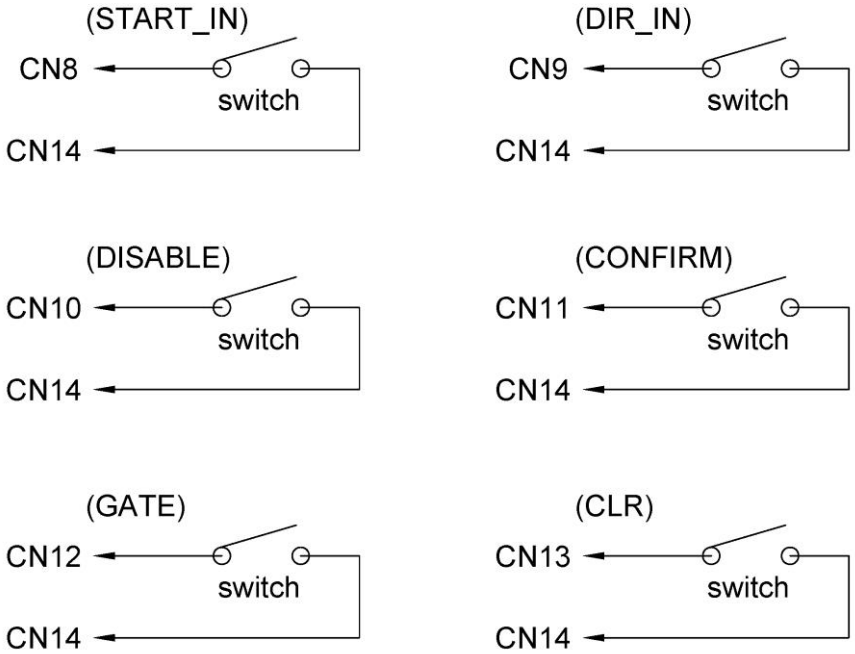

Functional Dip Switch：

SW	Name	OFF	ON
1	Counting Mode	Count Backward	Count Forward
2	Sensor Switch	Stop	Work
3	Manual Confirm Mold	Auto Zero	Start the Manual Confirmation
4	Switching Mode	Once Confirm	Twice Confirm
5	Automatic simulation learning mode	Stop	Work
6	Units arrangement Mode	Stop	Work
7	Reverse resuming	only one screw count backward	Enable to count backward within the screws quantity setting

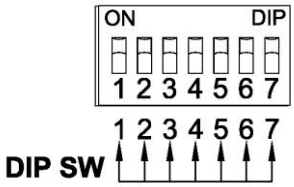

Instruction：

SW1：Selects ON, counts screws number forward as 1-----2-----3------4------5----------1…
Selects Off, count down the screws number as 5-----4-----3-----2------1----------5…

SW2：Sensing Switch, select ON means Counter needs external sensing switch, SKP-BC40HL must be in accordance with the sensing switch mode to determine if electric screwdriver will work. Select OFF means unnecessary for external switch, count number don't have to consider external switch to determine if it works.
Note：SA settings will affect SW2 = ON, SW4 = OFF the SENSOR drive mode, please refer to the SA setting for detail information.

SW3：The Count number Reset Mode, when counting screws number reach to the setting value, counter must be reset to default value, if select ON which stands for manual reset, user must press "SELECT/CONFIRM" / external CONFIRM (CN11+CN14) Key on the panel back the setting count number, otherwise Electric Screwdriver is unable to start under no confirming situation on the device. Select OFF makes system automatically to recover from the setting count number.

SW4：Switching Mode：Select ON means the external SENSOR need to have two signals been sent to SKP-BC40HL which stands for the fastener on operational process need to go through the sensor on machine table to identify the fastener has been removed from working table, and new fastener goes through another SENSOR for confirming the new fastener that has reached the working table. Therefore two confirming signals allow SKP-BC40HL to start the Electric Screwdriver running. Select OFF means only need one SENSOR to confirm the fastener that has been removed from this working table；this allows Electric Screwdriver starts to work.

SW5：Auto-Learning Mode：The Counter counts screws number with the judging value OK & NG which is set up by Ht and Lt, this Auto-Learning Mode is completely using Electric Screwdriver to fasten screws practically, memorize the screwing time from beginning to complete fastening automatically, user can only change this switch to ON, then system will ask how many screws (SC) of the fastening position been required (SL)? If need auto response time setting (At) or if need to use the Slow-Start setting (Rc) or if need to use the Speed of slow start (SP)?

SW6：Arrangement form：The memory can save five units number, user can push switch ON, the system will automatically arrange five units, easy for user to make arrangement at work.

SW7：Reverse Resuming：User can turn on the reverse resuming switch to loose screws back. The system is able to count backward for presetting quantity of screws to be fastened. If the reverse resuming switch is switched to off, the system is only to do countdown for the last screw.

Note：Multiple cycles (SW6：ON)：
(1) rr =0
Whether Sr = Y or Sr = N, the reverse will both added to the U1.

(2) rr>0：

The screw list set with rr；the screwdriver well not reverses and will not add screws on the screw count.

At this point the user press CLEAR button or use CN13 to clear the count value to solve the problem and restart the operation after the "new work.

If customers want to reverse all screws, please turn off the counter before start reverse.

CONFIRM ：

Code	Instruction	Notations
C1	Once confirm the external sensor. SW2 (ON)+SW3(OFF)+SW4(OFF)	External sensor * When the SA is set to HI, the display "C1"；if set is LO and will displayed "C.1 "
C2	Twice confirm the external sensor. SW2 (ON)+SW3(OFF)+SW4(ON) ※When error occur, sensor need to be triggered again. The panel will show "Er", press the "CONFIRM" on the panel or short circuit **CN11+CN14** to erase "Er", then the panel will indicate number of screw left in the previous job.	External sensors
C3	Manual confirm the panel. SW3 (ON)+SW2(OFF)+SW4(OFF)	Panel / External CONFIRM
C4	A switch SENSOR confirm +confirm button on the panel or short circuit **CN11+CN14** SW2(ON)+SW3(ON)+SW4(OFF)	External sensor + Panel / External CONFIRM * When the SA is set to HI, the display "C4"；if set is LO and will displayed "C.4 "
C5	Two switch SENSOR confirm + confirm button on the panel or short circuit **CN11+CN14** SW2(ON)+SW3(ON)+SW4(ON)	External sensors + Panel / External CONFIRM
CL	Reset to the default setting.	CLEAR

Error Code on LED description：

Symbol	Definition	Description
E3	Low Voltage Protect	1.Screwdriver will stop when the operation voltage is lower. 2.LED will display **[E3]** to indicate low voltage protect.
E4	High Temp. Protect	1.Screwdriver will stop when the operation temperature is higher. 2.LED will display **[E4]** to indicate high temperature protect.
E5	Stall Protect	1.Screwdriver will stop when motor is abnormal stalled after start. 2.LED will display **[E5]** to indicate stall protect.
E7	Push plate Error	1.Screwdriver will stop when push plate change between motor running. 2.LED will display **[E7]** to indicate abnormal operation.
E8	Brake Error	1.Screwdriver will stop when the abnormal brake signal appeared before start. 2.LED will display **[E8]** to indicate abnormal brake error.
E9	Memory Error	1.Screwdriver will stop when the internal flash memory fail. 2.LED will display **[E9]** to indicate internal flash memory error.
PC	Power Error	1.User changes the Hi/Lo switch status after the Key is locked. 2.Power setting can't match the screwdriver's specification. (e.g.DC 40V screwdriver connects to DC 24V setting on controller).

※ The error when the screw fastened was occurred during the external mode confirmation, the system will detect the abnormal state. The LED will show error code Er and the buzzer will ring. The operator must confirm the external sensor (CN11+CN14) or press CONFIRM.

※ **If using three units of data only and let three units in cycles. It can set up "00" in counting number on U4, when SW6 switch ON, the system will automatically move in circle from U1~U3.**

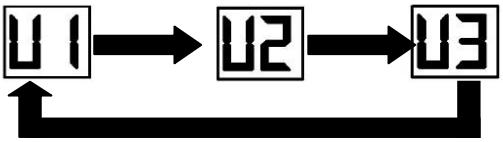

System setting

System procedure：

SL<SELECT>**SC**<SELECT>**At**<SELECT>**Rc**<SELECT>**SP**<SELECT>**Ht**<SELECT>**Lt**<SELECT>**LL**<SELECT>**Ns**<SELECT>**rt**<SELECT>**rr**<SELECT>**rS**<SELECT>SAVE

PROCESS TO SET UP SYSTEM：

1、 Please connect the cord, turn on the power switch until LED shows number.

2、 Please press SELECT key over three seconds till buzzer making sound, the panel will show SL , 01 to push UP/DOWN to decrease or increase the number, it can set up five units of number.

3、 To press SELECT key, buzzer will sound, the panel will show SC , 01 to push UP/DOWN to decrease or increase number, the maximum can set up 99.
SC：To set up counting number.

4、 To press SELECT, the screen will show At , 1.0 push UP/DOWN to increase or decrease number, the maximum can set up 9.9.
At：Automatic set up CLEAR time.

5、 To press SELECT, the screen will show Rc , 0.0 push UP/DOWN to increase or decrease number, the maximum can set up 9.9.
Rc：To set up slow-start time.

6、 To press SELECT, the screen will show SP , L0 , push UP/DOWN to increase or decrease number between L0~L9, the maximum can set up L9.
SP：To set up speed of slow start.

7、 To press SELECT, the screen will show Ht , 2.0 push UP/DOWN to increase or decrease number, the maximum can set up 9.9.
Ht：Stop time.

8、 To press SELECT, the screen will show Lt , 0.0 push POWER key, adjust decimals 00. , push UP/DOWN to increase or decrease number, the maximum can set up 9.99.
Lt：Set up Detect Start Time."02."means 0.02.

9、To press SELECT, the screen will show LL , 0.0 push POWER key, adjust decimals 00. , push UP/DOWN to increase or decrease number, the maximum can set up 9.90.
LL：No times confirmed within set-up time after fastening. "02." means 0.02.

10、Press SELECT for show NS on LED and press UP/DOWN for change the setting.
NS：choosing action or not for next screwing process when error occur during screwing.
N：unlock(default setting) Y：lock(need to press S for release)

11、To press SELECT, the screen will show rt, 0.0 , push POWER key, adjust decimals 00 , push UP/DOWN to increase or decrease number, the maximum can set up 9.99.
rt：Set up auto reverse time。

12、To press SELECT, the screen will show rr, 0.0 , push POWER key, adjust decimals 00 , push UP/DOWN to increase or decrease number, the maximum can set up 9.99.
rr：Set up auto forward time.

13、To press SELECT, the screen will show rS, 0.1, push POWER key, adjust decimal 10, push UP/DOWN to increase or decrease number, the maximum can set up 9.99.
rS：Set up automatically forward pause time.

14、To press SELECT 05 to confirm.

Function Name		Set up Time and Value	Description	Buzz Time/ Light	Manufacturer Set-Up Value
SL		01~05	Screw List	---	---
SC		01~99	Counting number / count-down only	---	05
At		0.1~9.9	Automatic zero time / Signal output time	---	1.0
RC		0.1~9.9	Slow start time	---	0.0
SP		L0~L9	Speed of start：L0：100%, L1~L9 (30%-90%) Rated speed	---	L0
Ht		0.0~9.9	Ht time Stop time (Show wrong as screwdriver can't stop at set time after starting, can be used to test stripped screws	Five buzz and LED red flash	2.0
Lt		0.00~9.99	Lt time will show wrong as screwdriver stops before Lt after starting, can test screw is not properly fastened at its position. .	Two buzz and LED red flash	0.00
LL		0.01~9.99	Reconfirm time after fastening.	---	0.00
NS		Y / N	Choosing action or not for next screwing process when error occur during screwing.	LED show NS	N
rt		0.06~9.99	Auto reverse time/ When the torque is reached and the screwdriver will start to reverse (backward) in this setting rt time range. (NOTE: rt value must exceed 0.05)		0.00
rr		0.00~9.99	Auto forward. when F/R switch is reverse (backward), set the number of seconds first for reverse immediately brakes and pause time rS. then forward until the torque is reached.		0
rS		0.10~9.99	Automatically forward pause time. When rr are setting (> 0), will show rS.		0.1
Backward to Count-Up		1 COUNT	When screwdriver is backward, the number will be back one	---	---
Ln		---	Automatic learning.	LED keeps flash of light	---
Buzzer	Er Wrong Set-Up	---	Wrong Set-Up, such as Lt＞Ht	---	---

Note：
(1)RC=0 or SP=L0 no slow start function
(2)The RC & SP / LL settings cannot coexist, there can be only one set value exists (valid).
(3)rt and rr settings cannot coexist, there can be only one set value exists (valid).

Data Chart：

Ht/Lt mainly set up the period of time. If stop is within the set period, it means OK. In contrast, it will be (NG), as stop before Lt or after Ht. and should reconfirm whether wrong screws is taken. More precise requested means more correct Ht/Lt set-up should be. The Lt default value: 0.00, but it can be increased or decreased in SELECT.

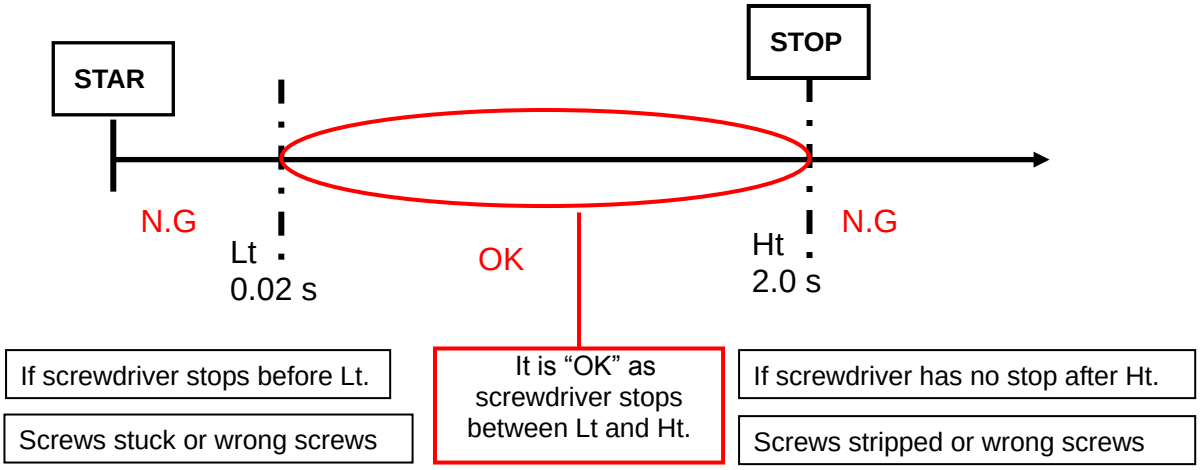

Execute under general pre-set program：

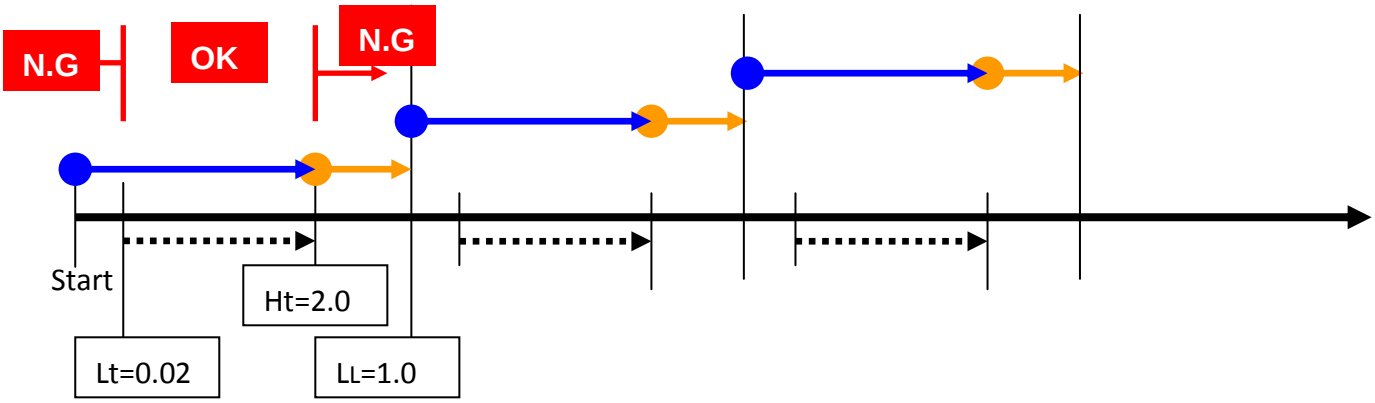

- ∗ **If the screwdriver stop time is in dotted line. it is normal fastening. "OK" will be shown.**
- ∗ **If the screwdriver stop time is before Lt or over Ht stop is before Ht or over Lt, it is "N.G.".**
- ∗ **User can freely adjust Ht. However, if Ht and Lt is closer, it will request more precise.**
- ∗ **If the user press the push button of the screwdriver after Ht and Lt setting, it is "N.G".**

Simulated Learning

1、 The switch mode SW5 change into ON.

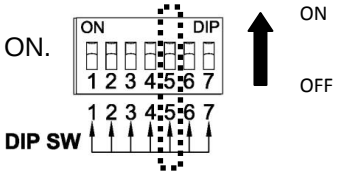

※When SW5 change to ON, it will force to enter simulated learning procedure, any function will not work.

2、 When it changes to ON, LED will flash. The user can set whether or not counting screws, starting slow-start. The simulated learning function will be turned on after these necessary condition confirming.

3、 When set up finish, LED will show 0.0 and the user can test to fasten screws, When screwdriver starts, LED will show the count. When screwdriver shut-off, that means time to fasten screws. User can proceed many tests until satisfaction. User can change SW5 switch to OFF, the system will set up Ht time automatically. (Note：Lt will be set to zero)

4、 If user does not satisfy number, user can change SW5 to OFF, push SELECT over three seconds, then enter menu to change.

System procedure：

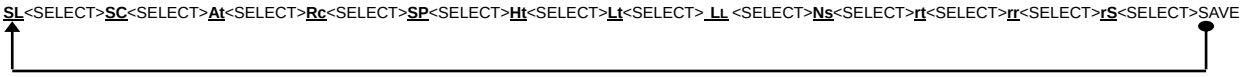

Grounding

When use Electric Screwdriver Controller, it should be grounded to avoid operator getting electrical shock. This controller is equipped with 3 leading wires and 3 pins of grounding plug to fit for grounding type of outlet. The grounding wire must be connected firmly with power supply equipment for effective grounding result. The leading wire with yellow-green color is a grounding wire. Never attempt to connect this yellow-green color wire on electrified connector, this Controller has built-in grounding wire with electric leakage safety grounding and additionally, the Controller can eliminate ESD static, which is produced by running the electric screwdriver, via grounding wire.

Servicing

Maintenance and Inspection ：

1. The controller must be operated in top condition, one day working hour must be not more than eight hours.
2. Please note don't let the controller get over heated, every minute use 10~15 screws to operate.
3. The frequency use of this electric screw driver is over eight hours a day, still it needs periodically testing and treatment. Every 5-6 months.

CAUTION

1. The use of other than genuine KILEWS replacement parts may Result in decreased tool performance and increased maintenance, and may invalidate all warranties.
2. All repairs and maintenance of this tool and its word must be performed by an authorized service center.
3. KILEWS is not responsible for customer modification of tools for applications on which KILEWS was not consulted.
4. Repairs should by made only by authorized, trained personnel. Consult your nearest KILEWS authorized service center.
5. It is the responsibility of the employer to place the information in this manual into the hands of the operator.

DO NOT ATTEMPT TO REPAIR THIS

ELECTRIC SCREW DRIVER

CAUTION

SAVE THESE INSTRUCTIONS

DO NOT DESTROY

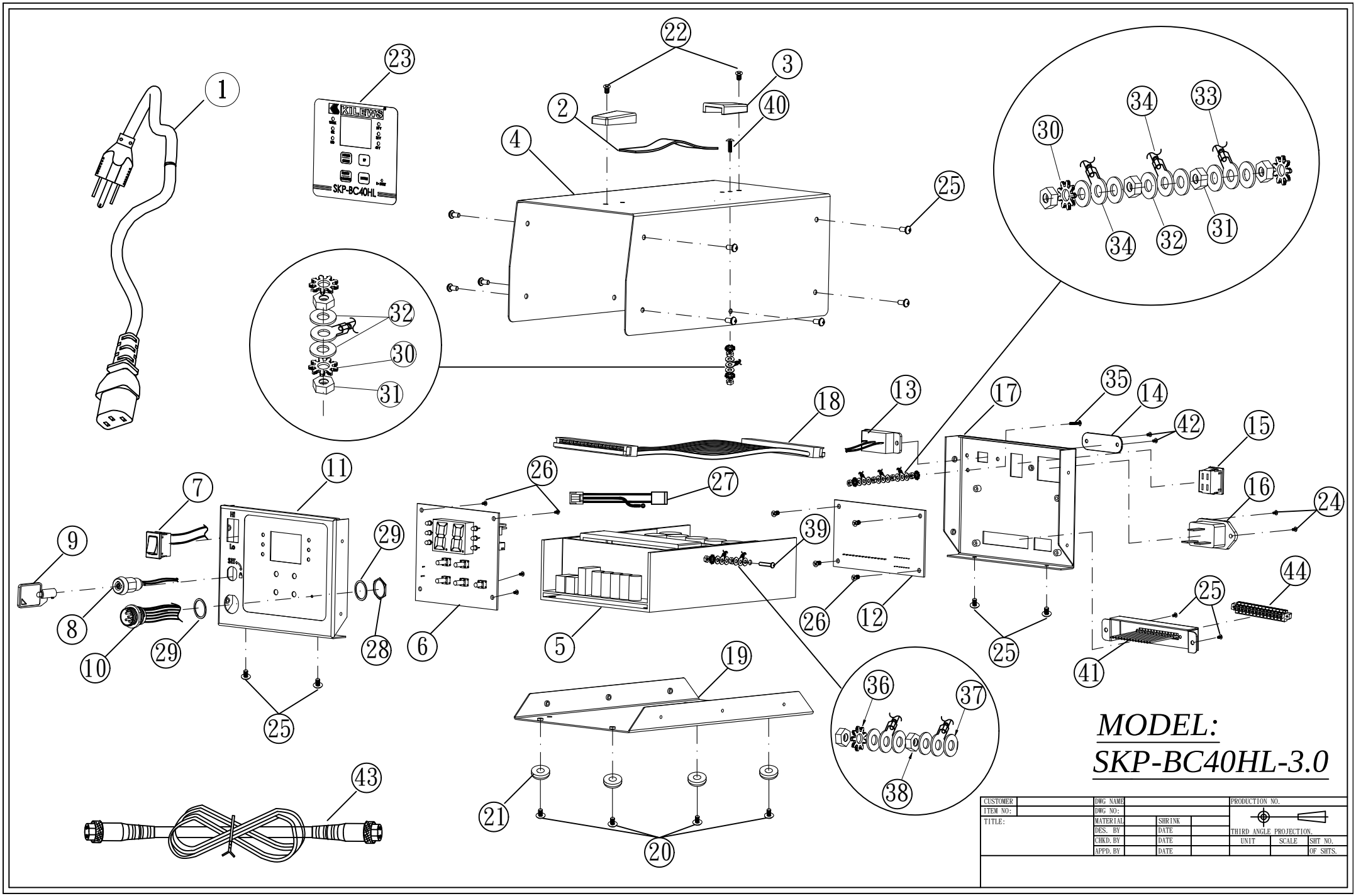
KILEWS
SKP-BC40HL
MODEL:
SKP-BC40HL-3.0
CUSTOMER
ITEM NO:
TITLE:
DWG NAME
DWG NO:
MATERIAL
SHRINK
DES. BY
DATE
CHKD. BY
DATE
APPD. BY
DATE
PRODUCTION NO.
THIRD ANGLE PROJECTION.
UNIT
SCALE
SHT NO.
OF SHTS.

NO	PARTS NO	PARTS NAME-E	PARTS NAME-C	Q'ty	NO	PARTS NO	PARTS NAME-E	PARTS NAME-C	Q'ty
1	AA50002	America Plug	美插電源線	1	21	CH20110	Rubber Shim	腳墊	4
	AA50002-1	Australia Plug	澳插電源線	1	22	CH20506	Screw 4*12	螺絲 4*12	2
	AA50002-2	Europe Plug	歐插電源線	1	23	YTM0171-1	Sticker-Model	面板貼紙	1
	AA50002-3	British Plug	英插電源線	1	24	CH20505	SCREW 3*8	螺絲 3*8	2
	AA50002-6	India Plug	印插電源線	1	25	CH20504	SCREW 3*5	螺絲 3*5	16
2	P11005	Handle	外殼皮帶	1	26	CH20505-6	SCREW 3*5	螺絲 3*5	8
3	W50102	Handle Loop Root	皮帶固定座	2	27	E31718	CONNECT	3P排插	1
4	P11038	Housing-Upside	外殼上蓋	1	28	X10068	BOLT	六角螺帽	1
5	EG50101-7F	Power PCB	電源機板成品	1	29	X10067	WASHER	墊片	2
6	EG50109-1	hypothesis PCB	計數機板成品	1	30	CH20302	WASHER	外齒型滑司 M4	4
7	P11402-11	Hi / Lo Switch ASS'Y	Hi / Lo 開關半成品	1	31	CH20401	BOLT M4	螺帽 M4	6
8	P11404-2	Key Switch ASS'Y	鑰匙開關半成品	1	32	CH20301	WASHER	華司 M4	8
9	P11404-1	Key	鑰匙	1	33	CH50696	GROUNDING MEANS	接地線 220mm	1
10	PZ50165-9	Connector ASS'Y 6Pin	6芯插座半成品	1	34	CH50695	GROUNDING MEANS	接地線 180mm	2
11	P11038-1	Housing-Front Side	外殼前蓋	1	35	CH20501	SCREW 4*25	螺絲 M4*25	1
12	EG50110-1	Output PCB	輸出機板成品	1	36	CH20302-3	WASHER	外齒型滑司 M3	1
13	P11403-1	Voltage Choice Switch ASS'Y	電壓選擇開關半成品	1	37	CH20305	WASHER	華司 M3	4
14	C50216	Fixture	保護蓋	1	38	CH20406	BOLT M3	螺帽 M3	2
15	P11401-13	Powe Switch	電源開關	1	39	CH20505-13	SCREW 3*20	螺絲 3*20	1
16	E31702	AC Inlet	電源插座	1	40	CH20516	SCREW 4*10	螺絲 4*10	1
17	P11038-2	Housing-backside	外殼後蓋	1	41	C50227A	PROTECTIVE COVER	轉接蓋半成品	1
18	E31715	36Pin Plug	36P排插頭	1	42	CH20513	Screw 3*12	螺絲 3*12	2
19	P11038-3	Housing-Underside	外殼下蓋	1	43	AA50001-139N	CORD ASSEMBLY 3M	電源線 3M	1
20	CH20504-0	Screw 3*5	螺絲 3*5	4	44	E31701-25	Female	母座	1

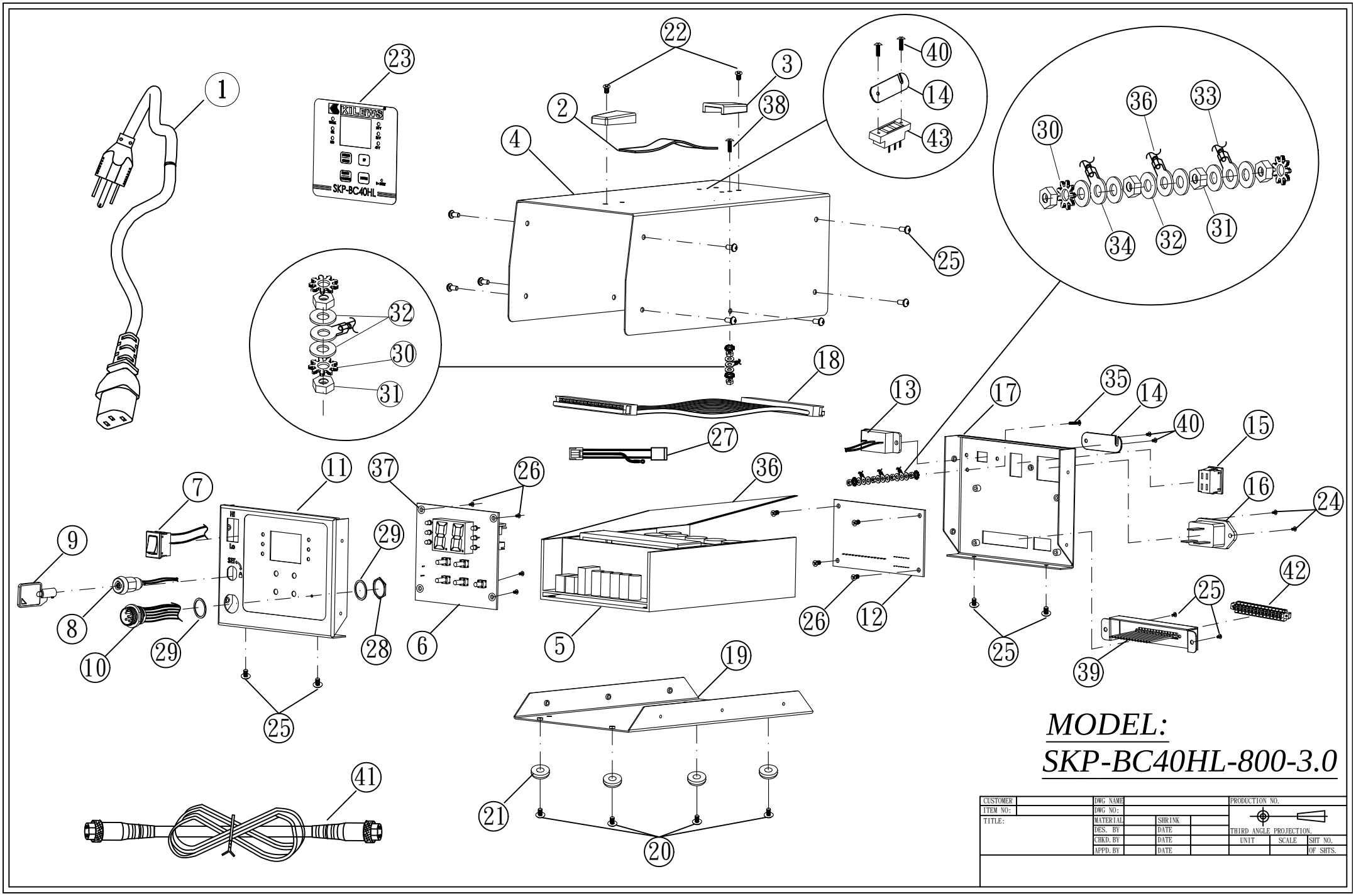
KILEWS
SKP-BC40HL
MODEL:
SKP-BC40HL-800-3.0
CUSTOMER
ITEM NO:
TITLE:
DWG NAME
DWG NO:
MATERIAL
DES. BY
CHKD. BY
APPD. BY
SHRINK
DATE
PRODUCTION NO.
THIRD ANGLE PROJECTION.
UNIT
SCALE
SHT NO.
OF SHTS.

NO	PARTS NO	PARTS NAME-E	PARTS NAME-C	Q'ty	NO	PARTS NO	PARTS NAME-E	PARTS NAME-C	Q'ty
1	AA50002	America Plug	美插電源線	1	21	CH20110	Rubber Shim	腳墊	4
	AA50002-1	Australia Plug	澳插電源線	1	22	CH20506	Screw 4*12	螺絲 4*12	2
	AA50002-2	Europe Plug	歐插電源線	1	23	YTM0171-8	Sticker-Model	面板貼紙	1
	AA50002-3	British Plug	英插電源線	1	24	CH20505	SCREW 3*8	螺絲 3*8	2
	AA50002-6	India Plug	印插電源線	1	25	CH20504	SCREW 3*5	螺絲 3*5	16
2	P11005	Handle	外殼皮帶	1	26	CH20505-6	SCREW 3*5	螺絲 3*5	8
3	W50102	Handle Loop Root	皮帶固定座	2	27	E31718-3	CONNECT	3P排插	1
4	P11038-10	Housing-Upside	外殼上蓋	1	28	X10068	BOLT	六角螺帽	1
5	EG50101-36	Power PCB	電源機板成品	1	29	X10067	WASHER	墊片	2
6	EG50109-1	hypothesis PCB	計數機板成品	1	30	CH20302	WASHER	外齒型滑司 M4	4
7	P11402-11	Hi / Lo Switch ASS'Y	Hi / Lo 開關半成品	1	31	CH20401	BOLT M4	螺帽 M4	6
8	P11404-2	Key Switch ASS'Y	鑰匙開關半成品	1	32	CH20301	WASHER	華司 M4	8
9	P11404-1	Key	鑰匙	1	33	CH50696-1	GROUNDING MEANS	接地線 220mm	1
10	PZ50165-9	Connector ASS'Y 6Pin	6芯插座半成品	1	34	CH50695	GROUNDING MEANS	接地線 180mm	1
11	P11038-1	Housing-Front Side	外殼前蓋	1	35	CH20501	SCREW 4*25	螺絲 M4*25	1
12	EG50110-1	Output PCB	輸出機板成品	1	36	CH50696-2	GROUNDING MEANS	接地線 90mm	1
13	P11403-1	Voltage Choice Switch ASS'Y	電壓選擇開關半成品	1	37	P11020	WASHER	墊片	4
14	C50216	Fixture	保護蓋	2	38	CH20516	SCREW 4*10	螺絲 4*10	1
15	P11401-13	Powe Switch	電源開關	1	39	C50227A	PROTECTIVE COVER	轉接蓋半成品	1
16	E31702	AC Inlet	電源插座	1	40	CH20513	Screw 3*12	螺絲 3*12	4
17	P11038-2	Housing-backside	外殼後蓋	1	41	AA50001-139N	CORD ASSEMBLY 3M	電源線 3M	1
18	E31715	36Pin Plug	36P排插頭	1	42	E31701-25	Female	母座	1
19	P11038-3	Housing-Underside	外殼下蓋	1	43	P11403-3	Voltage Choice Switch ASS'Y	電壓選擇開關半成品	1
20	CH20504-14	Screw 3*8	螺絲 3*8	4					

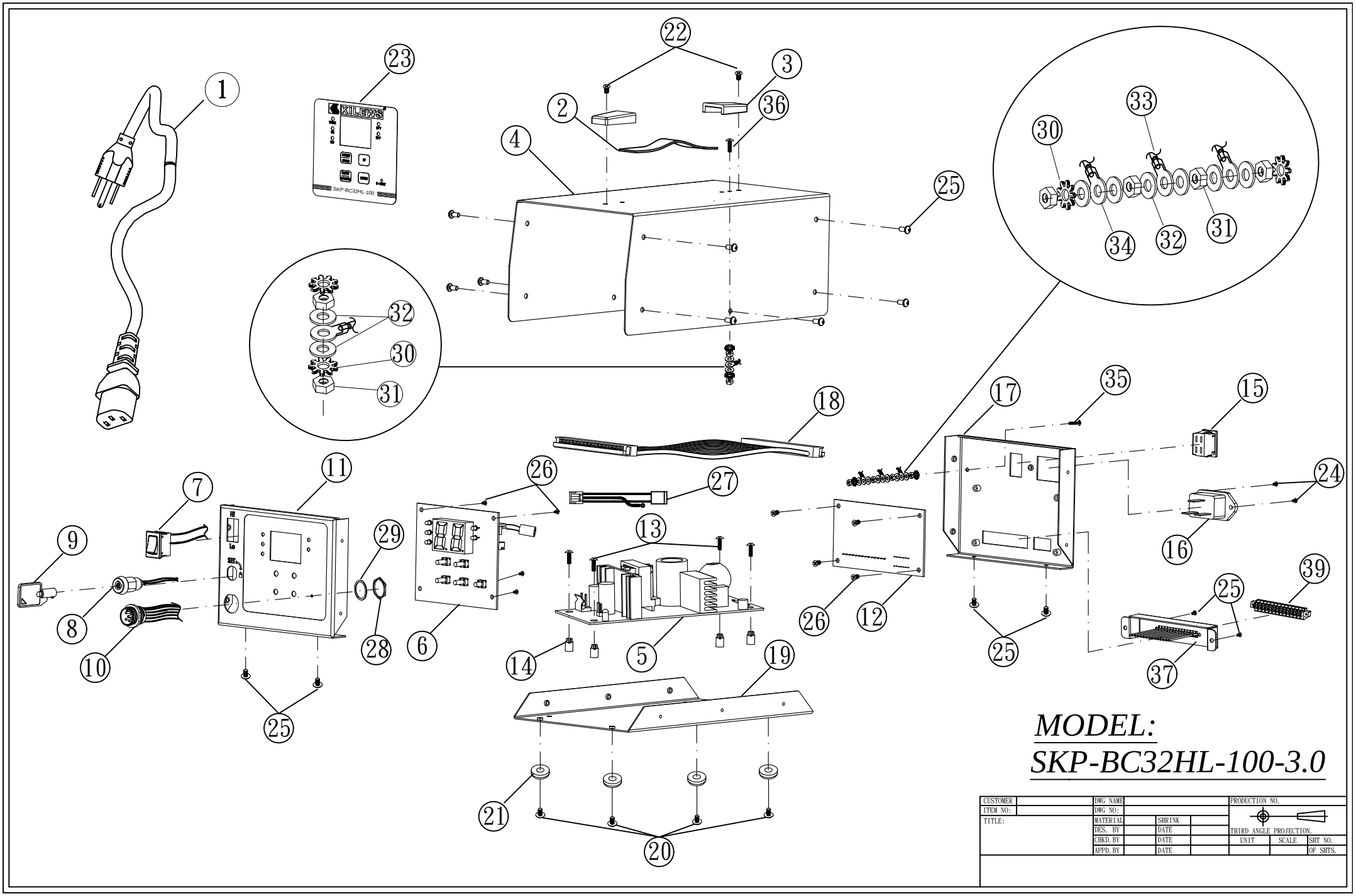
1
2
3
4
5
6
7
8
9
10
11
12
13
14
15
16
17
18
19
20
21
22
23
24
25
26
27
28
29
30
31
32
33
34
35
36
37
39
KILEWS
SKP-BC32HL-100
MODEL:
SKP-BC32HL-100-3.0
CUSTOMER
ITEM NO:
TITLE:
DWG NAME
DWG NO:
MATERIAL
SHRINK
DES. BY
DATE
CHKD. BY
DATE
APPD. BY
DATE
PRODUCTION NO.
THIRD ANGLE PROJECTION.
UNIT
SCALE
SHT NO.
OF SHTS.

NO	PARTS NO	PARTS NAME-E	PARTS NAME-C	Q'ty	NO	PARTS NO	PARTS NAME-E	PARTS NAME-C	Q'ty
1	AA50002	America Plug	美插電源線	1	19	P11039-3	Housing-Underside	外殼下蓋	1
	AA50002-1	Australia Plug	澳插電源線	1	20	CH20504-0	Screw 3*5	螺絲 3*5	4
	AA50002-2	Europe Plug	歐插電源線	1	21	CH20110	Rubber Shim	腳墊	4
	AA50002-3	British Plug	英插電源線	1	22	CH20506	Screw 4*12	螺絲 4*12	2
	AA50002-6	India Plug	印插電源線	1	23	YTM0172-1	Sticker-Model	面板貼紙	1
2	P11005	Handle	外殼皮帶	1	24	CH20505	SCREW 3*8	螺絲 3*8	2
3	W50102	Handle Loop Root	皮帶固定座	2	25	CH20504	SCREW 3*5	螺絲 3*5	16
4	P11039	Housung-Upside	外殼上蓋	1	26	CH20505-6	SCREW 3*5	螺絲 3*5	8
5	EG50101-30	Power PCB	電源機板成品	1	27	E31718	CONNECT	3P排插	1
6	EG50111-1	hypothesis PCB	計數機板成品	1	28	X10068	BOLT	六角螺帽	1
7	P11402-11	Hi / Lo Switch ASS'Y	Hi / Lo 開關半成品	1	29	X10067	WASHER	墊片	1
8	P11404-2	Key Switch ASS'Y	鑰匙開關半成品	1	30	CH20302	WASHER	外齒型滑司 M4	4
9	P11404-1	Key	鑰匙	1	31	CH20401	BOLT M4	螺帽 M4	6
10	PZ50165-9	Connector ASS'Y 6Pin	6芯插座半成品	1	32	CH20301	WASHER	華司 M4	8
11	P11038-1	Housing-Front Side	外殼前蓋	1	33	CH50696	GROUNDING MEANS	接地線 220mm	1
12	EG50110-1	Output PCB	輸出機板成品	1	34	CH50695	GROUNDING MEANS	接地線 180mm	1
13	CH20516	SCREW 3*10 NI	螺絲 3*10 NI	4	35	CH20501	SCREW 4*25	螺絲 M4*25	1
14	W50115	Spacer Support	間隔柱	4	36	CH20516	SCREW 4*10 NI	螺絲 4*10 NI	1
15	P11401-13	Powe Switch	電源開關	1	37	C50227A	PROTECTIVE COVER	轉接蓋半成品	1
16	E31702	AC Inlet	電源插座	1	38	AA50001-139N	CORD ASSEMBLY 3M	電源線 3M	1
17	P11039-2	Housing-backside	外殼後蓋	1	39	E31701-25	Female	母座	1
18	E31715	36Pin Plug	36P排插頭	1					